SIEMENS

SIMOTION

SIMOTION D4x5-2

Equipment Manual

Preface

Safety instructions 1

Description 2

Operator control (hardware) 3

Interfaces 4

Technical data of the D4x5-2 5

Dimension drawings 6

Supplementary system components 7

Spare parts/accessories 8

Standards and approvals A

ESD guidelines B

Valid for
SIMOTION D4x5-2, CX32-2, CBE30-2 and TB30
from version 5.7 or higher

03/2025
A5E33441547B

Legal information

Warning notice system

This manual contains notices you have to observe in order to ensure your personal safety, as well as to prevent damage to property. The notices referring to your personal safety are highlighted in the manual by a safety alert symbol, notices referring only to property damage have no safety alert symbol. These notices shown below are graded according to the degree of danger.

⚠ **DANGER**
indicates that death or severe personal injury **will** result if proper precautions are not taken.

⚠ **WARNING**
indicates that death or severe personal injury **may** result if proper precautions are not taken.

⚠ **CAUTION**
indicates that minor personal injury can result if proper precautions are not taken.

NOTICE
indicates that property damage can result if proper precautions are not taken.

If more than one degree of danger is present, the warning notice representing the highest degree of danger will be used. A notice warning of injury to persons with a safety alert symbol may also include a warning relating to property damage.

Qualified Personnel

The product/system described in this documentation may be operated only by **personnel qualified** for the specific task in accordance with the relevant documentation, in particular its warning notices and safety instructions. Qualified personnel are those who, based on their training and experience, are capable of identifying risks and avoiding potential hazards when working with these products/systems.

Proper use of Siemens products

Note the following:

⚠ **WARNING**
Siemens products may only be used for the applications described in the catalog and in the relevant technical documentation. If products and components from other manufacturers are used, these must be recommended or approved by Siemens. Proper transport, storage, installation, assembly, commissioning, operation and maintenance are required to ensure that the products operate safely and without any problems. The permissible ambient conditions must be complied with. The information in the relevant documentation must be observed.

Trademarks

All names identified by ® are registered trademarks of Siemens Aktiengesellschaft. The remaining trademarks in this publication may be trademarks whose use by third parties for their own purposes could violate the rights of the owner.

Disclaimer of Liability

We have reviewed the contents of this publication to ensure consistency with the hardware and software described. Since variance cannot be precluded entirely, we cannot guarantee full consistency. However, the information in this publication is reviewed regularly and any necessary corrections are included in subsequent editions.

Siemens Aktiengesellschaft
Digital Industries
Postfach 48 48
90026 NÜRNBERG
GERMANY

A5E33441547B
Ⓟ 10/2024 Subject to change

Copyright © Siemens 2010 - 2025.
All rights reserved

Preface

Content of the Manual

This **document** is part of the **SIMOTION D documentation package**.

Scope

The *SIMOTION D4x5-2* manual is valid for the SIMOTION D4x5-2 Control Units, as well as the supplementary CX32-2, CBE30-2 and TB30 system components.

A separate *SIMOTION D4x5* Manual is available for the SIMOTION D425, SIMOTION D435 and SIMOTION D445/D445-1 devices including the CX32, CBE30 and TB30 system components.

Standards

The SIMOTION system was developed in accordance with ISO 9001 quality guidelines.

Content of the manual

The following is a description of the purpose and use of the product manual:

- Description
  Provides information about the SIMOTION system and its integration in the automation environment.
- Operator control (hardware)
  Provides information about the structure and architecture of the devices.
- Interfaces
  Provides information about the different interfaces of the devices, their pin assignment, and possible applications.
- Technical data
  Provides information about the properties and features of the devices.
- Dimension drawings
- Spare parts / accessories
  Provides information about spare parts and accessories of the SIMOTION D4x5-2, CX32-2 and CBE30-2.
- Appendix
  Provides information about the various standards and specifications fulfilled by the device.
- Index for locating information.

SIMOTION Documentation

An overview of the SIMOTION documentation can be found in the SIMOTION Documentation Overview document.

This documentation is included as electronic documentation in the scope of delivery of SIMOTION SCOUT. It comprises ten documentation packages.

The following documentation packages are available for SIMOTION product version V5.7:

- SIMOTION Engineering System Handling
- SIMOTION System and Function Descriptions
- SIMOTION Service and Diagnostics
- SIMOTION IT
- SIMOTION Programming
- SIMOTION Programming - References
- SIMOTION C
- SIMOTION P
- SIMOTION D
- SIMOTION Supplementary Documentation

Hotline and Internet addresses

SIMOTION at a glance

We have compiled an overview page from our range of information about SIMOTION with the most important information on frequently asked topics - which can be opened with only one click.

Whether beginner or experienced SIMOTION user – the most important downloads, manuals, tutorials, FAQs, application examples, etc. can be found at

https://support.industry.siemens.com/cs/ww/en/view/109480700

Additional information

Click the following link to find information on the following topics:

- Documentation overview
- Additional links to download documents
- Using documentation online (find and search manuals/information)

https://support.industry.siemens.com/cs/ww/en/view/109479653

My Documentation Manager

Click the following link for information on how to compile documentation individually on the basis of Siemens content and how to adapt it for the purpose of your own machine documentation:

https://support.industry.siemens.com/My/ww/en/documentation

Training

Click the following link for information on SITRAIN - Siemens training courses for automation products, systems and solutions:

http://www.siemens.com/sitrain

FAQs

Frequently Asked Questions can be found in SIMOTION Utilities & Applications, which are included in the scope of delivery of SIMOTION SCOUT, and in the Service&Support pages in **Product Support**:

https://support.industry.siemens.com/cs/de/en/ps/14505/faq

Technical support

Country-specific telephone numbers for technical support are provided on the Internet under **Contact**:

https://support.industry.siemens.com/cs/ww/en/sc/2090

Disposal and recycling of the device

SIMOTION D is an environmentally friendly product. It includes the following features:

- In spite of its excellent resistance to fire, the flame-resistant agent in the plastic used for the housing does not contain halogens.
- Identification of plastic materials in accordance with ISO 11469.
- Less material used because the unit is smaller and with fewer components thanks to integration in ASICs.

The disposal of the products described in this manual should be performed in compliance with the valid national regulations.

The products can be largely recycled owing to their low pollutant content. For environmentally friendly recycling and disposal of your old device, please contact a company certified for the disposal of electronic waste and dispose of the device in accordance with the regulations in your country.

If you have any further questions about disposal and recycling, please contact your local Siemens representative. Contact details can be found in our contacts database on the Internet at:

http://www.automation.siemens.com/partner/index.asp

Further information / FAQs

You can find further information on this manual at the following FAQ:

https://support.industry.siemens.com/cs/ww/de/view/27585482

The following information sources are also available:

- SIMOTION Utilities & Applications: SIMOTION Utilities & Applications will be included in the SIMOTION SCOUT scope of delivery and, along with FAQs, also contain free utilities (e.g. calculation tools, optimization tools, etc.) as well as application examples (ready-to-apply solutions such as winders, cross cutters or handling)
- The latest SIMOTION FAQs at https://support.industry.siemens.com/cs/ww/de/ps/14505/faq
- SIMOTION SCOUT online help
- For additional documentation, see the *Overview of SIMOTION documentation* (separate document)

Open source software

Third-party software - License conditions and copyright notes

Copyright notes for the third-party software contained in this product, in particular the Open Source Software, as well as the applicable license conditions for such third-party software, can be found in the READ_OSS.ZIP file on the SIMOTION D CF Card / SD Card or in the corresponding firmware files.

Accessing OSS information

You can access the OSS information of hardware-related software components (e.g. BIOS) in the following way:

Description

Commercially available SD cards (formatted as FAT32) or SIMOTION memory cards can be used. Open Source cannot be included in the ZIP file due to the size of the BIOS flash.

File name of the saved information: OSSINFO.ZIP

Content of OSSINFO.ZIP:

- OSS information of the SIMOTION D4x5-2 (-0AA2) contains information about hardware-related software components (e.g. BIOS).
- Changes and extensions are possible and reserved

Copying OSS information from the BIOS flash to the SD card

The Open Source information can be read as follows:

- Using the SD card reader, create an OSSINFO directory (upper case) on an empty FAT32-formatted standard SD or SIMATIC memory card with ≥ 1 GB.
- Insert the card into the switched-off device and switch the device on.
- The copying process begins. 7-segment display shows "c." (lower case c with dot); c = copy.
- The copying process is complete when the 7-segment display shows "0". If an error occurs, "F." is displayed, e.g. if the OSS file is not available on the device. The device remains in this state permanently (firmware does not start).

- Remove the SD card from the device and read and unpack the OSSINFO.ZIP file using the SD card reader.
  You will find the OSSINFO.ZIP file in the root directory.
- Ensure you have enough free space on the card and disable write protection.

QR code

The QR code printed on the device contains the instructions for accessing OSS information.

Special note for resellers

The notes and the license conditions contained in the READ_OSS.ZIP file must be passed on to the purchaser in order to avoid the reseller and purchaser from violating the license conditions.

Source code availability

Some license terms of third-party software components used in this product may require us to provide you with the source code and other information for those components. You can find this information directly on or with the product (e.g. on mass storage devices, DVD). If this is not possible for technical reasons, Siemens will be happy to send you this OSS source code in exchange for reimbursement of the processing costs. Please contact the address provided at the end of this section.

Siemens AG

Digital Factory Customer Services

DI CS SD CSS TS

Gleiwitzer Str. 555

D-90475 Nuremberg, Germany

Internet (https://support.industry.siemens.com/cs/ww/en/ps)

Tel.: +49 911 895 7222

Table of contents

Preface **3**

1 Safety instructions **13**

1.1 Fundamental safety instructions 13
1.1.1 General safety instructions 13
1.1.1.1 Malfunctions of the machine as a result of incorrect or changed parameter settings 16
1.1.2 Safety instructions for electromagnetic fields (EMF) 17
1.1.3 Handling electrostatic sensitive devices (ESD) 17
1.1.4 Cybersecurity information 17
1.1.5 Note regarding the general data protection regulation 18
1.1.6 Danger to life due to software manipulation when using removable storage media 18
1.1.7 Residual risks of power drive systems 19

1.2 Specific safety information for SIMOTION D4x5-2 20

1.3 Hazard due to externally supplied plant units 21

1.4 Hazard due to permissible potential difference 22

2 Description **23**

2.1 System overview 23

2.2 System components 27

2.3 I/O integration 33

2.4 Representation of SIMOTION D425-2 DP and D435-2 DP 34

2.5 Representation of SIMOTION D425-2 DP/PN and D435-2 DP/PN 36

2.6 Representation of SIMOTION D445-2 DP/PN and D455-2 DP/PN 39

2.7 Type plates 41

2.8 CompactFlash card 45
2.8.1 Usage and function of the CompactFlash Card 45
2.8.2 CompactFlash card 46

2.9 SD card 50
2.9.1 Usage and function of the SD card 50
2.9.2 SD card 51

2.10 Data matrix code 54

3 Operator control (hardware) **57**

3.1 Overview of operator control and display elements 57

3.2 Operator controls 58
3.2.1 Service and operating mode switch 58
3.2.2 DIAG button 62
3.2.3 RESET button 63

3.3 7-segment and LED displays 63

4 Interfaces ... 65

4.1 Interface overview ... 65

4.2 DRIVE-CLiQ interfaces ... 66

4.3 PROFINET IO interface (only for SIMOTION D4x5-2 DP/PN) ... 68

4.4 Digital I/Os ... 71
4.4.1 Properties ... 71
4.4.2 Using the digital inputs/outputs ... 76

4.5 Power supply ... 77

4.6 Ethernet interfaces ... 79

4.7 PROFIBUS DP interfaces ... 84

4.8 Slot for CompactFlash card/SD card ... 87

4.9 Measuring sockets ... 88

4.10 USB interfaces ... 89

5 Technical data of the D4x5-2 ... 91

5.1 Shipping and storage conditions ... 91

5.2 Ambient conditions ... 92

5.3 Dimensions and weights ... 95

5.4 Power supply ... 96

5.5 Interfaces and performance features ... 98

5.6 CompactFlash card/SD card ... 103

5.7 Clock ... 104

5.8 Input and output circuit ... 105

5.9 Certificates, approvals, declarations of conformity ... 105

6 Dimension drawings ... 107

6.1 D425-2 and D435-2 dimension drawing ... 107

6.2 D445-2 DP/PN and D455-2 DP/PN dimension drawing ... 108

6.3 CAD data, dimension drawings, and circuit-diagram macros ... 109

7 Supplementary system components ... 111

7.1 Connection options overview ... 111

7.2 Fan/battery module ... 112
7.2.1 Cooling the SIMOTION D4x5-2 and backing up the real-time clock ... 112
7.2.2 Installing the fan/battery module ... 114

7.3 TB30 terminal board ... 115
7.3.1 Description ... 115
7.3.2 Safety information for the TB30 ... 116
7.3.3 Interfaces ... 116
7.3.3.1 Overview ... 116
7.3.3.2 Connection diagram ... 117

7.3.3.3 Power supply of digital outputs ... 118
7.3.3.4 Digital I/Os ... 119
7.3.3.5 Analog inputs and outputs ... 120
7.3.3.6 Working with analog inputs ... 121
7.3.3.7 Commissioning ... 121
7.3.4 Technical Specifications ... 121

7.4 CBE30-2 Ethernet communication board ... 123
7.4.1 Overview ... 123
7.4.2 Type plate ... 124
7.4.3 Safety information ... 125
7.4.4 Interface description ... 125
7.4.5 LED displays ... 127
7.4.6 Dimension drawing ... 128
7.4.7 Commissioning ... 128
7.4.8 Technical data ... 129

7.5 CX32-2 controller extension ... 130
7.5.1 Overview of CX32-2 ... 130
7.5.2 Interfaces ... 132
7.5.2.1 Overview of interfaces ... 132
7.5.2.2 List of interfaces ... 133
7.5.2.3 DRIVE-CLiQ interface ... 134
7.5.2.4 Digital I/Os (X122) ... 134
7.5.2.5 Power supply ... 138
7.5.2.6 Measuring sockets ... 139
7.5.3 Displays of the LEDs ... 139
7.5.4 Cause and rectification of faults ... 140
7.5.5 RESET button ... 140
7.5.6 Commissioning ... 140
7.5.7 Technical data of the CX32-2 ... 140
7.5.8 CX32-2 dimension drawings ... 144

7.6 Terminal module TM31 ... 145

7.7 Terminal module TM41 ... 146

7.8 Terminal Module TM54F ... 146

7.9 TM15 and TM17 High Feature terminal modules ... 147

7.10 CUA31/CUA32 control unit adapter ... 149

7.11 DMC20 DRIVE-CLiQ hub ... 150

8 Spare parts/accessories ... 151

8.1 Available spare parts and accessories ... 151

A Standards and approvals ... 155

A.1 General rules ... 155

A.2 SIMOTION D4x5-2 device-specific notes ... 157

B ESD guidelines ... 159

B.1 ESD definition ... 159

B.2 Electrostatic charging of individuals ... 159

B.3 Basic measures for protection against discharge of static electricity 160
Index 161

Safety instructions 1

1.1 Fundamental safety instructions

1.1.1 General safety instructions

WARNING

Electric shock and danger to life due to other energy sources

Touching live components can result in death or severe injury.

- Only work on electrical devices when you are qualified for this job.
- Always observe the country-specific safety rules.

Generally, the following six steps apply when establishing safety:

1. Prepare for disconnection. Notify all those who will be affected by the procedure.
2. Isolate the drive system from the power supply and take measures to prevent it being switched back on again.
3. Wait until the discharge time specified on the warning labels has elapsed.
4. Check that there is no voltage between any of the power connections, and between any of the power connections and the protective conductor connection.
5. Check whether the existing auxiliary supply circuits are de-energized.
6. Ensure that the motors cannot move.
7. Identify all other dangerous energy sources, e.g. compressed air, hydraulic systems, or water. Switch the energy sources to a safe state.
8. Check that the correct drive system is completely locked.

After you have completed the work, restore the operational readiness in the inverse sequence.

WARNING

Electric shock if there is no ground connection

For missing or incorrectly implemented protective conductor connection for devices with protection class I, high voltages can be present at open, exposed parts, which when touched, can result in death or severe injury.

- Ground the device in compliance with the applicable regulations.

⚠ WARNING

Electric shock due to connection to an unsuitable power supply

When equipment is connected to an unsuitable power supply, exposed components may carry a hazardous voltage. Contact with hazardous voltage can result in severe injury or death.

- Only use power supplies that provide SELV (Safety Extra Low Voltage) or PELV- (Protective Extra Low Voltage) output voltages for all connections and terminals of the electronics modules.

⚠ WARNING

Electric shock due to equipment damage

Improper handling may cause damage to equipment. For damaged devices, hazardous voltages can be present at the enclosure or at exposed components; if touched, this can result in death or severe injury.

- Ensure compliance with the limit values specified in the technical data during transport, storage and operation.
- Do not use any damaged devices.

⚠ WARNING

Electric shock due to unconnected cable shield

Hazardous touch voltages can occur through capacitive cross-coupling due to unconnected cable shields.

- As a minimum, connect cable shields and the conductors of power cables that are not used (e.g. brake cores) at one end at the grounded housing potential.

⚠ WARNING

Spread of fire from built-in devices

In the event of fire outbreak, the enclosures of built-in devices cannot prevent the escape of fire and smoke. This can result in serious personal injury or property damage.

- Install built-in units in a suitable metal cabinet in such a way that personnel are protected against fire and smoke, or take other appropriate measures to protect personnel.
- Ensure that smoke can only escape via controlled and monitored paths.

WARNING

Unexpected movement of machines caused by radio devices or mobile phones

The use of radio devices or mobile telephones in the immediate vicinity of the components can result in equipment malfunction. Malfunctions may impair the functional safety of machines and can therefore put people in danger or lead to property damage.

- If you come closer than around 2 m to such components, switch off any radios or mobile phones.
- Use the "SIEMENS Industry Online Support app" only on equipment that has already been switched off.

WARNING

Fire due to inadequate ventilation clearances

Inadequate ventilation clearances can cause overheating of components with subsequent fire and smoke. This can cause severe injury or even death. This can also result in increased downtime and reduced service lives for devices/systems.

- Ensure compliance with the specified minimum clearance as ventilation clearance for the respective component.

NOTICE

Overheating due to inadmissible mounting position

The device may overheat and therefore be damaged if mounted in an inadmissible position.

- Only operate the device in admissible mounting positions.

WARNING

Unrecognized dangers due to missing or illegible warning labels

Dangers might not be recognized if warning labels are missing or illegible. Unrecognized dangers may cause accidents resulting in serious injury or death.

- Check that the warning labels are complete based on the documentation.
- Attach any missing warning labels to the components, where necessary in the national language.
- Replace illegible warning labels.

WARNING

Unexpected movement of machines caused by inactive safety functions

Inactive or non-adapted safety functions can trigger unexpected machine movements that may result in serious injury or death.

- Observe the information in the appropriate product documentation before commissioning.
- Carry out a safety inspection for functions relevant to safety on the entire system, including all safety-related components.
- Ensure that the safety functions used in your drives and automation tasks are adjusted and activated through appropriate parameterizing.
- Perform a function test.
- Only put your plant into live operation once you have guaranteed that the functions relevant to safety are running correctly.

Note

Important safety notices for Safety Integrated functions

If you want to use Safety Integrated functions, you must observe the safety notices in the Safety Integrated manuals.

1.1.1.1 Malfunctions of the machine as a result of incorrect or changed parameter settings

WARNING

Malfunctions of the machine as a result of incorrect or changed parameter settings

As a result of incorrect or changed parameterization, machines can malfunction, which in turn can lead to injuries or death.

- Protect the parameterization against unauthorized access.
- Handle possible malfunctions by taking suitable measures, e.g. emergency stop or emergency off.

1.1.2 Safety instructions for electromagnetic fields (EMF)

⚠ WARNING

Danger to life from electromagnetic fields

Electromagnetic fields (EMF) are generated by the operation of electrical power equipment such as transformers, converters or motors.

People with pacemakers or implants are at a special risk in the immediate vicinity of these devices/systems.

- Ensure that the persons involved are the necessary distance away (minimum 2 m).

1.1.3 Handling electrostatic sensitive devices (ESD)

Electrostatic sensitive devices (ESD) are individual components, integrated circuits, modules or devices that may be damaged by either electric fields or electrostatic discharge.

NOTICE

Damage through electric fields or electrostatic discharge

Electric fields or electrostatic discharge can cause malfunctions through damaged individual components, integrated circuits, modules or devices.

- Only pack, store, transport and send electronic components, modules or devices in their original packaging or in other suitable materials, e.g conductive foam rubber of aluminum foil.
- Only touch components, modules and devices when you are grounded by one of the following methods:
  - Wearing an ESD wrist strap
  - Wearing ESD shoes or ESD grounding straps in ESD areas with conductive flooring
- Only place electronic components, modules or devices on conductive surfaces (table with ESD surface, conductive ESD foam, ESD packaging, ESD transport container).

1.1.4 Cybersecurity information

Siemens provides products and solutions with industrial cybersecurity functions that support the secure operation of plants, systems, machines and networks.

In order to protect plants, systems, machines and networks against cyber threats, it is necessary to implement – and continuously maintain – a holistic, state-of-the-art industrial cybersecurity concept. Siemens' products and solutions constitute one element of such a concept.

Customers are responsible for preventing unauthorized access to their plants, systems, machines and networks. Such systems, machines and components should only be connected to an enterprise network or the internet if and to the extent such a connection is necessary

and only when appropriate security measures (e.g. firewalls and/or network segmentation) are in place.

For additional information on industrial cybersecurity measures that may be implemented, please visit
https://www.siemens.com/cybersecurity-industry.

Siemens' products and solutions undergo continuous development to make them more secure. Siemens strongly recommends that product updates are applied as soon as they are available and that the latest product versions are used. Use of product versions that are no longer supported, and failure to apply the latest updates may increase customer's exposure to cyber threats.

To stay informed about product updates, subscribe to the Siemens Industrial Cybersecurity RSS Feed under
https://new.siemens.com/cert.

1.1.5 Note regarding the general data protection regulation

Siemens observes the principles of data protection, in particular the principle of data minimization (privacy by design). For this product this means:

The product does not process / store any personal data, only technical functional data (e.g. time stamp). If the user links this data with other data (e.g. shift plans) or stores personal data on the same medium (e.g. hard disk) and thus establishes a personal reference, the user must ensure compliance with data protection regulations.

1.1.6 Danger to life due to software manipulation when using removable storage media

⚠ WARNING

Danger to life due to software manipulation when using removable storage media

The storage of files on removable storage media involves a high risk of infection, e.g. via viruses or malware. Incorrect parameter assignment can cause machines to malfunction, which can lead to injuries or death.

- Protect the files on removable storage media against harmful software through appropriate protective measures, e.g. virus scanners.

1.1.7 Residual risks of power drive systems

When performing the risk assessment for a machine or plant in accordance with the respective local regulations (e.g. EC Machinery Directive), the machine manufacturer or plant constructor must take into account the following residual risks associated with the control and drive components of a drive system:

1. Unintentional movements of driven machine or system components during commissioning, operation, maintenance and repairs caused by, for example:
   - Hardware and/or software errors in the sensors, control system, actuators, and cables and connections
   - Response times of the control system and of the drive
   - Operation and/or environmental conditions outside the specification
   - Condensation/conductive contamination
   - Parameterization, programming, cabling, and installation errors
   - Use of wireless devices / mobile phones in the immediate vicinity of electronic components
   - External influences/damage
   - X-rays, ionizing radiation and cosmic radiation
2. Unusually high temperatures, including open flames, as well as emissions of light, noise, particles, gases, etc., can occur inside and outside the components under fault conditions caused by, for example:
   - Component failure
   - Software errors
   - Operation and/or environmental conditions outside the specification
   - External influences/damage
3. Hazardous shock voltages caused by, for example:
   - Component failure
   - Influence during electrostatic charging
   - Induction of voltages in moving motors
   - Operation and/or environmental conditions outside the specification
   - Condensation/conductive contamination
   - External influences/damage
4. Electrical, magnetic and electromagnetic fields generated in operation that can pose a risk to people with a pacemaker, implants or metal replacement joints, etc., if they are too close
5. Release of environmental pollutants or emissions as a result of improper operation of the system and/or failure to dispose of components safely and correctly

For more information about the residual risks of the drive system components, see the relevant sections in the technical user documentation.

1.2 Specific safety information for SIMOTION D4x5-2

⚠ WARNING

Danger to life from hazardous voltage when connecting an unsuitable power supply

Only safety extra low voltage in accordance with EN/IEC 60950-1 may be connected at all connectors and terminals.

⚠ WARNING

Danger to life from electric shock due to insufficient safety isolation

Employing protection against direct contact using DVC A (PELV) is only permissible in areas with equipotential bonding and in dry rooms indoors.

Use other protective measures against electric shock, such as touch protection, if the specified conditions are not met.

⚠ WARNING

Danger to life from unexpected movement of machines on automatic restart

An automatic restart can be programmed for SIMOTION controllers. When the power returns, the axes start automatically.

Make sure this presents no hazard to personnel or property.

NOTICE

Damage to option boards caused by electric fields or electrostatic discharge

Option boards are ESD-sensitive components.

De-energize the SIMOTION D4x5-2 device before inserting or removing the option board. The SIMOTION D4x5-2 is in a de-energized state when all LEDs are off.

Comply with the ESD rules.

NOTICE

Damage to the CompactFlash card from electrical fields or electrostatic discharge

The CompactFlash card is an ESD-sensitive component.

De-energize the SIMOTION D4x5-2 device before inserting or removing the CompactFlash card. The SIMOTION D4x5-2 is in a de-energized state when all LEDs are off.

Comply with the ESD rules.

NOTICE

SD card damage caused by electric fields or electrostatic discharge

The SD card is an ESD component.

De-energize the SIMOTION D4x5-2 device before inserting or removing the SD card. The SIMOTION D4x5-2 is in a de-energized state when all LEDs are off.

Comply with the ESD rules.

NOTICE

Higher operating temperature if ventilation clearances are too small

The ventilation clearances of 80 mm above and below the components must be observed.

The unit protects itself from overheating by shutting down.

The ventilation clearance is measured from the lower edge of the module, i.e. the fan/battery module is not included in the dimension.

WARNING

Danger to persons and machines due to hot temperatures on components

Please note that the temperatures of the components may be elevated.

1.3 Hazard due to externally supplied plant units

WARNING

Electric shock due to externally supplied plant units

Even if the main supply to the plant is disconnected, externally supplied plant units can continue to carry voltage. An electric shock on contact with live parts can lead to death or serious injury.

Therefore, ensure that the plant is completely disconnected from the power supply before starting work. This means that all externally supplied plant units must also be disconnected from the power supply.

1.4 Hazard due to permissible potential difference

⚠ WARNING

Electric shock due to permissible electric potential difference

Due to the permissible electric potential difference, a dangerous voltage may be present at the inputs of modules. An electric shock on contact with live parts can lead to death or serious injury.

Therefore, ensure that the plant is completely disconnected from the power supply before starting work. This means that all externally supplied plant units must also be disconnected from the power supply.

Description 2

2.1 System overview

Overview

SIMOTION D is a drive-based version of SIMOTION based on the SINAMICS S120 drive family.

With SIMOTION D, the SIMOTION PLC and motion control functionalities as well as the SINAMICS S120 drive software run on shared control hardware.

SIMOTION D is available in two versions:

- SIMOTION D410-2 is a compact Control Unit predestined for single-axis applications. The Control Unit is snapped directly on to the SINAMICS Power Module in blocksize format and has an integrated drive control for either one servo, one vector or one *V/f* axis.
- SIMOTION D4x5-2 is a Control Unit for multi-axis applications in SINAMICS S120 booksize format. The following performance versions are offered:
  - SIMOTION D425-2 (BASIC performance) Control Unit for up to 16 axes
  - SIMOTION D435-2 (STANDARD performance) Control Unit for up to 32 axes
  - SIMOTION D445-2 (HIGH performance) Control Unit for up to 64 axes
  - SIMOTION D455-2 (ULTRA-HIGH performance) Control Unit for up to 128 axes or applications with very short control cycles

The SIMOTION D4x5 2 is described in this manual. Separate manuals are available for the SIMOTION D410-2 and the D4x5/D410 predecessor modules.

Like SINAMICS S120, SIMOTION D also follows the Totally Integrated Automation (TIA) concept. TIA is characterized by integrated data management, configuration, and communication for all products and systems. Thus, an extensive toolbox of automation modules is also available for SIMOTION D.

Below you can find an overview of the hardware:

Table 2-1 Overview of the hardware

Module	Article no.
SIMOTION D425-2 DP	6AU1 425-2AA00-0AA0
SIMOTION D425-2 DP/PN	6AU1 425-2AD00-0AA0
SIMOTION D435-2 DP	6AU1 435-2AA00-0AA0
SIMOTION D435-2 DP/PN	6AU1 435-2AD00-0AA0, -0AA2
SIMOTION D445-2 DP/PN	6AU1 445-2AD00-0AA0, -0AA1
SIMOTION D455-2 DP/PN	6AU1 455-2AD00-0AA0, -0AA2
[1] The hardware release is listed on the SIMOTION D rating plates	

Note

In order to cover all versions of SIMOTION D for multi-axis applications, the product will be referred to as "D4x5-2". Specific product designations will be used for information that applies only to one product version, e.g. D445-2 DP/PN.

SIMOTION D4x5-2 DP describes all PROFIBUS versions, and SIMOTION D4x5-2 DP/PN all PROFIBUS/PROFINET versions of the SIMOTION D4x5-2 Control Units.

Note

SIMOTION D4x5-2 (-0AA2) is based on a redesign of the hardware and fully covers the performance spectrum of the SIMOTION D4x5-2.
Issues that apply to this product version are referred to as D4x5-2 (-0AA2).

The descriptions in this manual generally apply to the modules and their respective versions. The device version is mentioned separately only in the event of a deviation in behavior or technical specifications.

Application

The SIMOTION D4x5-2 is ideally suited to applications with many coordinated axes with high clock-pulse rates.

Typical applications include:

- Compact multiple-axis machines
- High-performance applications with short machine cycles
- Compact machines
  - Including the complete machine control in the drive
  - With extensive connection possibilities for communication, HMI and I/O
- Distributed drive concepts
  - Applications with many axes
  - Synchronization of several SIMOTION D Control Units using distributed synchronous operation

Versions

The Control Units are available in the versions SIMOTION D425-2 (BASIC performance), SIMOTION D435-2 (STANDARD performance), SIMOTION D445-2 DP/PN (HIGH performance) and SIMOTION D455-2 DP/PN (ULTRA-HIGH performance). The versions differ in their PLC performance and in their motion control performance. The main distinguishing features are:

Table 2-2 Device versions and features

	SIMOTION D425-2	**SIMOTION D435-2**	**SIMOTION D445-2**	**SIMOTION D455-2**
Maximum number of axes	16	32	64	128
Minimum servo/interpolator cycle clock	0.5 ms	D435-2 DP: 0.5 ms D435-2 DP/PN: 0.25 ms	0.25 ms	0.25 ms 0.125 ms [1]
DRIVE-CLiQ interfaces	4	6	6	6

[1] Only with ET 200SP, SCOUT TIA and Servo_fast / IPO_fast

The Control Units feature PLC and motion control performance (open-loop control and motion control) for up to 16, 32, 64 or 128 axes, as required.

The integrated drive computing performance of the Control Units allows up to 6 servo, 6 vector or 12 *V/f* axes on each D4x5-2 Control Unit (drive control based on CU320-2, firmware version ≥ V4.x).

The drive control supports servo control (for a highly dynamic response), vector control (for maximum torque accuracy) and *V/f* control.

SIMOTION D435-2 DP/PN and D455-2 DP/PN are also available as SIPLUS version for use under extremely harsh environmental conditions, e.g. in toxic atmospheres (for details refer to technical specifications). As BasedOn products, the SIPLUS versions have the same functionality as the standard modules and are configured in the same way.

The SIMOTION D4x5-2 Control Units and their CX32-2, CBE30-2 and TB30 supplementary system components are described in the following.

Note

With the SIZER configuration tool, you can easily configure the SINAMICS S110/120 drive family including SIMOTION.

It provides you with support for selecting and dimensioning the components required for a Motion Control task.

You can also determine the possible number of axes and the resulting load with SIZER in accordance with your performance requirements.

Hardware components

As the central hardware, SIMOTION D uses the SIMOTION D4x5-2 as Control Unit consisting of the SIMOTION runtime system and the SINAMICS drive control. The Control Unit uses the SINAMICS Integrated drive with various SINAMICS S120 drive modules (Line and Motor Modules) to perform open-loop and closed-loop control of the axis grouping. A range of additional SINAMICS S120 components, such as SMx encoder systems or Terminal Modules can also be connected via DRIVE-CLiQ. With a few exceptions (e.g. no basic positioner EPOS, no Basic Operator Panel BOP20, etc.), the drive control integrated in SIMOTION D has the same control properties and performance features as the SINAMICS S120 CU320-2 Control Unit. The EPOS functionality is provided by the SIMOTION technology functions. The functionality of SIMOTION D can be expanded with distributed I/O via PROFIBUS or PROFINET IO.
The following figure shows a typical SIMOTION D axis grouping.

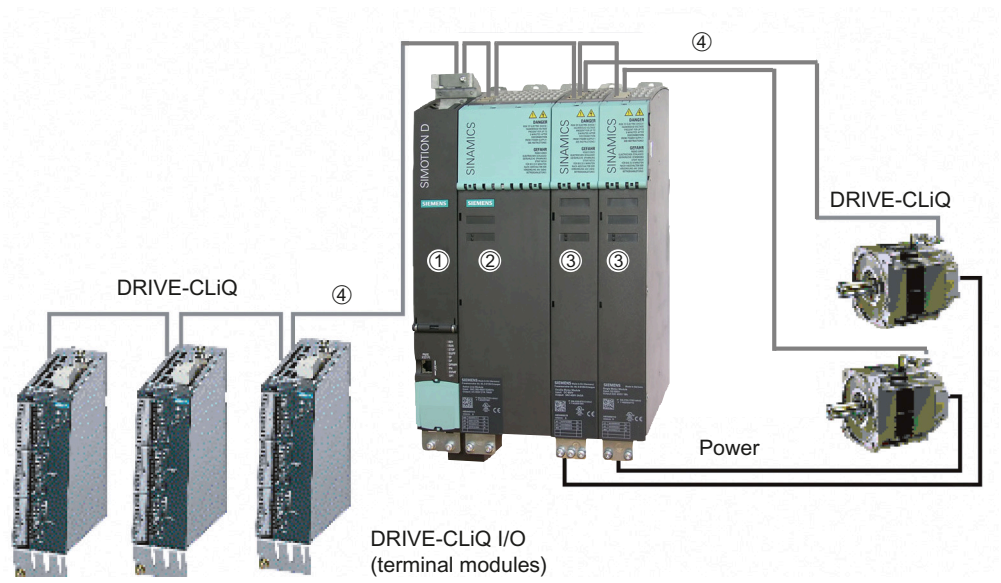

Figure 2-1 Example of an axis grouping with SIMOTION D4x5-2

A SIMOTION D axis grouping generally consists of the following elements:

- **SIMOTION D** (Control Unit) (1)
  This unit contains the programmable runtime system of SIMOTION and the drive software of SINAMICS S120. In principle, SIMOTION D is capable of controlling multiple axes/drives.
- One **SINAMICS infeed** (Line Module) (2)
  This module generates a DC link from the supply system.
- **SINAMICS power units** (Motor Modules) (3)
  These modules are used to control motors.
  It is also possible to operate SINAMICS Power Modules in blocksize format with the SINAMICS Control Unit Adapter (CUA). A separate infeed is then unnecessary.
- **DRIVE-CLiQ components** (4)
  In SINAMICS S120 / SIMOTION D, the individual components of the drive system communicate with each other via DRIVE-CLiQ. In addition to power components, it is also possible to link encoder systems and special DRIVE-CLiQ I/O devices via DRIVE-CLiQ.

Extension of the drive computing performance

The motion control performance of a SIMOTION D4x5-2 can be utilized in full by expanding the computing performance at the drive in two different ways:

- SINAMICS S/G Control Units (e.g. CU320-2, CU310-2, CU305, CU250S-2, etc.) together with further drive components can be connected via PROFIBUS or PROFINET.
- With SIMOTION D4x5-2, the CX32-2 Controller Extension can be connected via DRIVE-CLiQ. This module is extremely compact, does not require a separate CF card/SD card and can control up to 6 servo, 6 vector, or 12 *V/f* axes.

Software components

The basic functionality of SIMOTION D is supplied with a CF card/SD card and includes:

The SIMOTION runtime system with the following functions:

- Freely programmable runtime system (IEC 61131)
- Various runtime levels (tasks)
- PLC and arithmetic functionality
- Motion control functions
- Communication functions

The SINAMICS S120 drive control with the following functions:

- Closed-loop current and torque control
- Closed-loop speed control
- Closed-loop infeed

2.2 System components

Central components

SIMOTION D4x5-2 communicates with automation components via the following interfaces:

- PROFIBUS DP
- Ethernet
- PROFINET IO
- DRIVE-CLiQ (DRIVE Component Link with IQ)

SIMOTION D features a SINAMICS Integrated drive element. The communication with the SINAMICS Integrated is performed via PROFIBUS mechanisms (DP Integrated), i.e. the communication is handled, for example, via PROFIdrive telegrams.

Shorter cycle times and greater numbers of addresses for each node are achieved with the "DP Integrated" compared to the "external PROFIBUS DP".

The most important components of the system and their functions are shown below.

Table 2-3 Central components

Component	Function
SIMOTION D4x5-2 controller	... is the central motion control module. This module contains the programmable SIMOTION runtime for the SIMOTION D4x5-2 and the SINAMICS S120 drive software. You can use the integrated high-speed digital I/Os as: • User-addressable process I/Os • Homing inputs • Inputs for measuring inputs • Outputs for fast output cams The measuring sockets can output any analog signals.
System software	The basic functionality of SIMOTION D is supplied with a CF card/SD card and includes: • SIMOTION runtime (kernel) • Drive software of SINAMICS S120 - implements all drive functions
Power supply	... provides the electronics power supply for SIMOTION D, e.g. via the SITOP power supply.

PROFIBUS DP

The Control Unit can communicate with the following components via the PROFIBUS DP interfaces:

Table 2-4 Components on PROFIBUS DP

Component	Function
Programming device (PG/PC)	... configures, parameterizes, programs, and tests with the "SIMOTION SCOUT" engineering system (ES)
SIMATIC HMI device	... is used for operating and monitoring functions. This is not an essential requirement for the operation of a Control Unit
Other controllers (e.g. SIMOTION or SIMATIC)	... e.g. higher-level controller (plant controller); modular machine concepts with multiple controllers, distributed across individual machine modules.
Distributed I/O systems	
SIMATIC ET 200MP	Modular I/O system for cabinet installation and high channel densities in the SIMATIC S7-1500 packaging system. SIMATIC ET 200MP permits the shortest bus cycle times and fastest response time even with large volumes of data.
SIMATIC ET 200M	Modular I/O system for cabinet installation and high channel densities in the SIMATIC S7-300 packaging system.
SIMATIC ET 200SP	Finely scalable I/O system for cabinet installation; ET 200SP features a single-cable and multi-cable connection with push-in terminals, compact dimensions, high performance, and low part variety.
SIMATIC ET 200S	Finely scalable I/O system for cabinet configuration and particularly time-critical applications; including motor starters, safety technology and individual grouping of load groups.

Component	Function
SIMATIC ET 200AL	Modular, distributed I/O system with compact I/O modules in IP65/67; simple installation in all mounting positions even in small spaces; front and transverse screw fastenings on flat surfaces or on aluminum supporting channels; flexible connection to PROFINET or PROFIBUS or simple integration in SIMATIC ET 200SP.
SIMATIC ET 200pro	Modular I/O system with IP65/67 degree of protection for machine-related applications with no cabinet; with features such as compact designs, integrated PROFIsafe safety technology, PROFINET connection and live module replacement.
SIMATIC ET 200eco	I/O system with IP65/67 degree of protection for machine-related applications with no cabinet, and with flexible and fast ECOFAST or M12 connection methods.
Other PROFIBUS I/O	
Gateways	• DP/AS-Interface link 20E and DP/AS-Interface link Advanced for the PROFIBUS DP gateway to AS-Interface • DP/DP coupler for connecting two PROFIBUS DP networks
Drive interfaces	• ADI4 (Analog Drive Interface for 4 axes) for connection of drives with analog ± 10 V setpoint interface or for external encoders • IM174 (Interface Module for 4 axes) for connection of drives with analog ± 10 V setpoint interface, for external sensors, or for connection of stepper drives with pulse-direction interface
Drive units with PROFIBUS DP interface (e.g. SINAMICS S120)	... convert speed setpoints into signals for controlling the motors and supply the power required to operate the motors. Also can be operated as an isochronous slave on PROFIBUS DP.
Teleservice adapter	Remote diagnostics

Ethernet

The Control Unit can communicate with the following components via the Ethernet interfaces or be embedded in an automation environment:

Table 2-5 Components on the Ethernet

Component	Function
Programming device (PG/PC)	... configures, parameterizes, programs, and tests with the "SIMOTION SCOUT" engineering system (ES)
Master computer	... communicates with other devices via UDP, TCP/IP
SIMATIC HMI device	... is used for operating and monitoring functions. This is not an essential requirement for the operation of a Control Unit.

PROFINET IO

The D4x5-2 DP/PN can communicate with the following components via the onboard PROFINET IO interface or via the Ethernet communication board (CBE30-2).

Table 2-6 Components on the PROFINET IO

Component	Function
Programming device (PG/PC)	... configures, parameterizes, programs and tests with the "SIMOTION SCOUT" engineering system (ES).
SIMATIC HMI device	... is used for operating and monitoring functions. This is not an essential requirement for the operation of a Control Unit.
Other controllers (e.g. SIMOTION or SIMATIC)	... e.g. higher-level controller (plant controller); modular machine concepts with multiple controllers, distributed across individual machine modules.
Master computer	... communicates with other devices via UDP, TCP/IP
Distributed I/O systems	
SIMATIC ET 200MP	Modular I/O system for cabinet installation and high channel densities in the SIMATIC S7-1500 packaging system. SIMATIC ET 200MP permits the shortest bus cycle times and fastest response time even with large volumes of data. With the time-based I/Os, signals can be recorded or output to the precise µs.
SIMATIC ET 200M	Modular I/O system for cabinet installation and high channel densities in the SIMATIC S7-300 packaging system.
SIMATIC ET 200SP	Finely scalable I/O system for cabinet installation; ET 200SP features a single-cable and multi-cable connection with push-in terminals, compact dimensions, high performance, and low part variety. With the time-based I/Os, signals can be recorded or output to the precise µs.
SIMATIC ET 200S	Finely scalable I/O system for cabinet configuration and particularly time-critical applications; including motor starters, safety technology and individual grouping of load groups.
SIMATIC ET 200AL	Modular, distributed I/O system with compact I/O modules in IP65/67; simple installation in all mounting positions even in small spaces; front and transverse screw fastenings on flat surfaces or on aluminum supporting channels; flexible connection to PROFINET or PROFIBUS or simple integration in SIMATIC ET 200SP.
SIMATIC ET 200pro	Modular I/O system with IP65/67 degree of protection for machine-related applications with no cabinet; with features such as compact designs, integrated PROFIsafe safety technology, PROFINET IO connection and live module replacement.
SIMATIC ET 200eco PN	Compact block I/O with IP65/66/67 degree of protection for machine-related applications with no cabinet, and with M12 connection method. Very rugged and resistant encapsulated metal enclosure.
Other PROFINET IO I/O devices	
Drive units with PROFINET IO interface	... convert speed setpoints into signals for controlling the motor and supply the power required to operate the motors.
Gateways	• IE/AS-Interface link PN IO for the PROFINET IO gateway to AS-Interface • PN/PN coupler for connecting two PROFINET IO networks

DRIVE-CLiQ

The DRIVE-CLiQ interfaces permit a fast connection to the SINAMICS drive components.

DRIVE-CLiQ offers the following advantages within the DRIVE-CLiQ topology rules:

- Expandability of components
- Automatic detection of components by the Control Unit
- Standardized interfaces to all components
- Uniform diagnostics down to the components
- Uniform service through to the components
- Simple mechanical handling

The controller can communicate with the following components via DRIVE-CLiQ:

Table 2-7 Components connected to DRIVE-CLiQ

Component	Function
Control Unit (SINAMICS S110/ S120)	Central control module in which the open- and closed-loop control functions for the drive are implemented.
Line Module (SINAMICS S120)	... generates a DC link from the supply system.
Motor Module (SINAMICS S120)	... controls motors (DC/AC inverters, booksize).
Power Module (SINAMICS S110/ S120)	... controls motors (AC/AC converters, blocksize).
CX32-2 Controller Extension	... enables additional axes to be connected for SIMOTION D4x5-2.
CUA31/CUA32 Control Unit Adapter	... enables a Power Module in blocksize format to be connected to a booksize D4x5-2, CX32-2 or CU320-2 Control Unit.
TM15, TM17 High Feature Terminal Modules	The TM15 and TM17 High Feature Terminal Modules are used to implement inputs of measuring inputs and outputs of output cams. In addition, these Terminal Modules provide drive-related digital I/Os with short signal delay times.
TM31 Terminal Module	... enables a terminal expansion via DRIVE-CLiQ (additional analog and digital I/Os).
TM41 Terminal Module	... enables a terminal expansion (analog and digital I/Os) and encoder emulation.
TM54F Terminal Module	... enables terminal expansion (fail-safe digital I/Os) for controlling the safe motion monitoring functions of the integrated drives.
TM120 Terminal Module	Four temperature sensors (KTY84-130 or PTC) can be evaluated via the TM120 Terminal Module. The temperature sensor inputs are safely electrically separated from the evaluation electronics in the TM120 Temperature Module and are suitable for evaluating the temperature of special motors, e.g. 1FN linear motors and 1FW6 built-in torque motors.
TM150 Terminal Module	The TM150 Terminal Module can be used to evaluate temperature sensors (KTY, PT100, PT1000, PTC, and bimetal normally closed contact). This means, for example, that other temperatures from the process can be measured in addition to the motor temperature. Temperature sensors can be evaluated using a 2, 3 or 4-wire system. Twelve temperature sensors can be evaluated with 2-wire evaluation and six temperature sensors with 3 and 4-wire evaluation.

Component	Function
SMx Sensor Modules	... enable acquisition of encoder data from connected motors via DRIVE-CLiQ.
Motors with DRIVE-CLiQ interface	... enable simplified commissioning and diagnostics, as the motor and encoder type are identified automatically.
DMC20/DME20 DRIVE-CLiQ hub	... enables the number of DRIVE-CLiQ interfaces to be increased and the creation of a point-to-point topology.

Power Modules via CUA31/32

The following Power Modules are supported:

- PM340
- PM240-2 (as of SIMOTION V4.4 / SINAMICS V4.7)

The mixed operation of a PM240-2 with booksize modules and/or PM340 blocksize modules on a CU320-2/D4x5-2/CX32-2 is possible as of SINAMICS V4.7 HF12 or SIMOTION V4.4 HF6 (SINAMICS Integrated V4.7 HF12).

Note

You will find detailed information on components of the SINAMICS S110/S120 product family in the SINAMICS S110/S120 manuals.

It is possible that older DRIVE-CLiQ components can no longer be used with SIMOTION D4x5-2/CX32-2. You will find detailed information on this topic in the SIMOTION D4x5-2 Commissioning and Hardware Installation Manual at "Migration of D4x5 to D4x5-2" in Section "Permissible combinations".

Optional components

The functionality of the D4x5-2 Control Unit can be expanded with the following components:

Table 2-8 Optional components

Component	Function	D4x5-2 DP	D4x5-2 DP/PN
CBE30-2 Ethernet communication board	Communication via PROFINET IO with IRT and PROFINET IO with RT	No	Yes
TB30 Terminal Board	Terminal expansion, i.e. additional analog and digital I/Os	Yes	Yes

The components are plugged into the option slot of the Control Unit.

2.3 I/O integration

Note

Note that not all modules in the ET 200 I/O family are approved for SIMOTION. Moreover, system-related functional differences can come into play when these I/Os or I/O systems are used on SIMOTION vs. on SIMATIC. For example, special process-control functions (e.g. HART modules, etc.) are not supported by SIMOTION for the ET 200M distributed I/O system.

A detailed, regularly updated list of the I/O modules approved for use with SIMOTION, as well as notes on their use, can be found on the Internet at: (https://support.industry.siemens.com/cs/ww/en/view/11886029)

In addition to the I/O modules enabled for SIMOTION, in principle all certified standard PROFIBUS slaves (DP-V0/DP-V1/DP-V2) and PROFINET IO devices with RT and IRT real-time classes may be connected to SIMOTION D4x5-2. These modules are integrated using the GSD file (PROFIBUS) or GSDML file (PROFINET) provided by the relevant device manufacturer.

Note

Please note that in individual cases further boundary conditions must be fulfilled in order to integrate a standard slave/standard device into SIMOTION. Thus, a few modules require "driver blocks" , e.g. in the form of function blocks, that permit (or simplify) integration.

For modules released with SIMOTION (e.g. SIMATIC S7-300 module FM 350-1, etc.), these driver blocks are part of the SIMOTION SCOUT engineering system command library.

2.4 Representation of SIMOTION D425-2 DP and D435-2 DP

The following figure shows the SIMOTION D425-2 DP and D435-2 DP with their interfaces and front panel elements (fault and status displays).

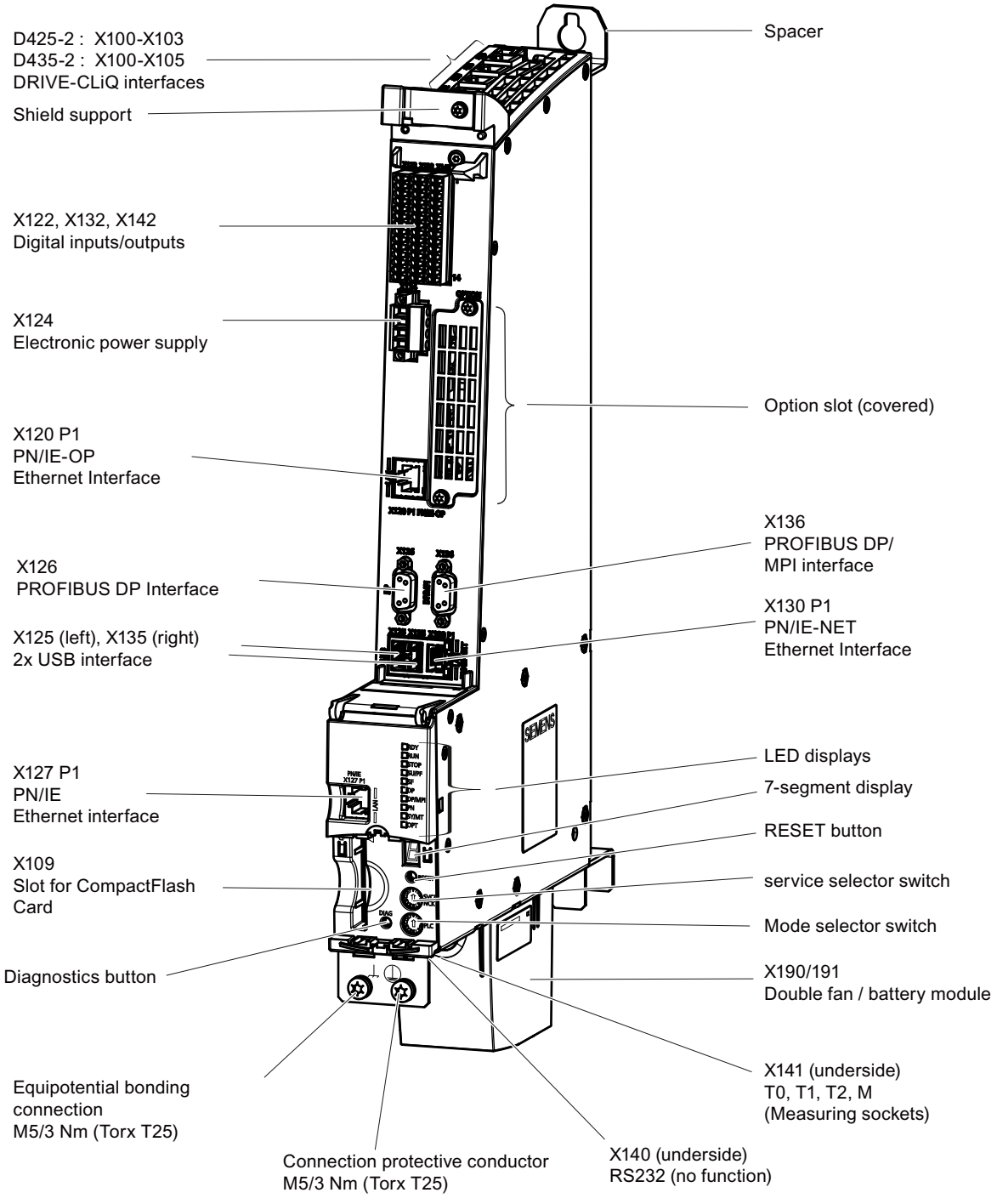

Figure 2-2 D425-2 DP and D435-2 DP representation

Note

SIMOTION D425-2 DP and D435-2 DP must be operated with a double fan/battery module for heat dissipation. Without this module, the Control Units will not start up and cannot be commissioned.

Information on how to install the double fan/battery module can be found in "Supplementary system components", in Section Installing the fan/battery module (Page 114).

Note

SIMOTION D425-2 DP and D435-2 DP are supplied with pre-assembled spacers. These can be removed if necessary.

For further details, see the *SIMOTION D4x5-2* Commissioning and Hardware Installation Manual.

2.5 Representation of SIMOTION D425-2 DP/PN and D435-2 DP/PN

The following figure shows the SIMOTION D425-2 DP/PN and D435-2 DP/PN with their interfaces and front panel elements (fault and status displays).

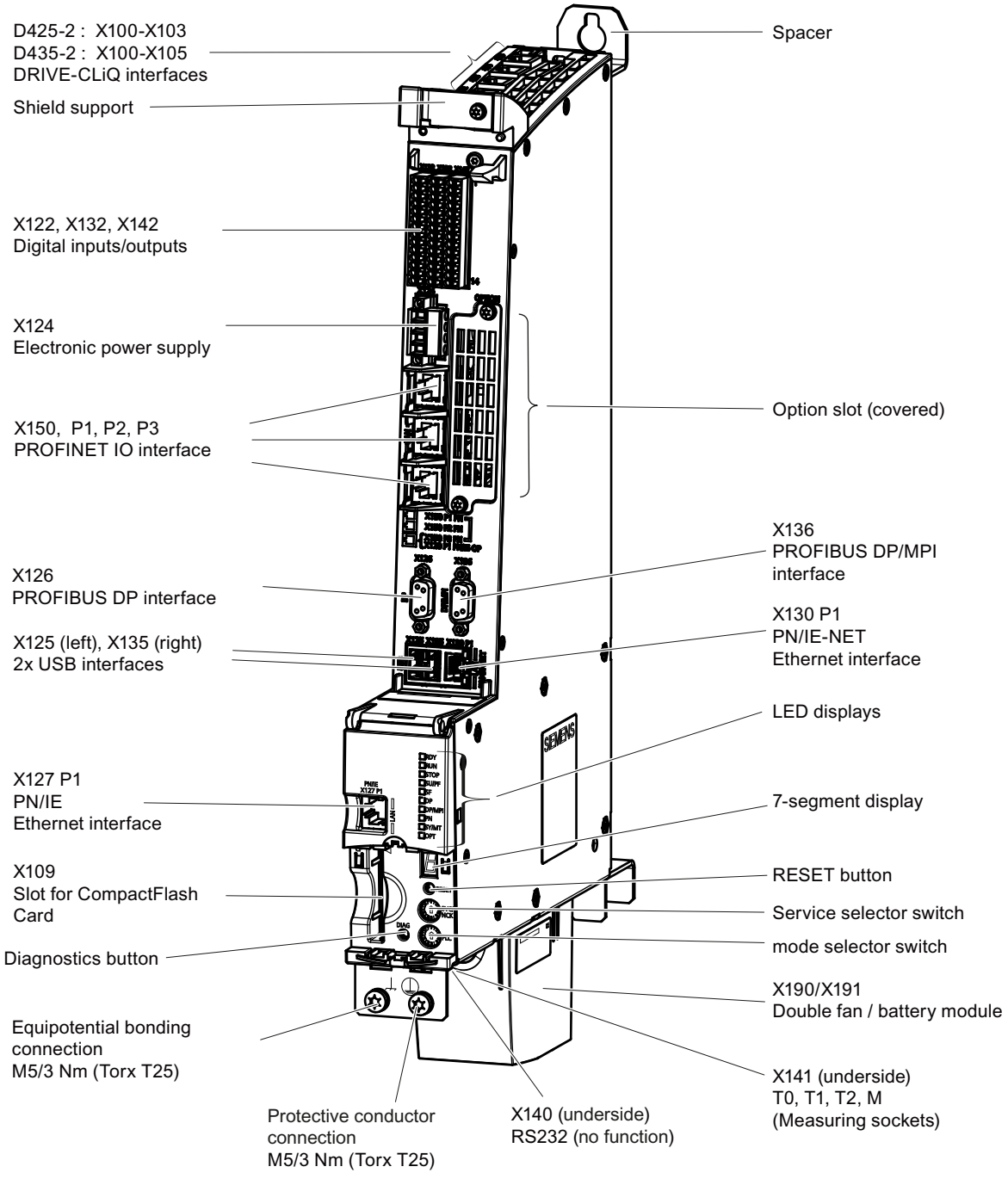

Figure 2-3 D425-2 DP/PN and D435-2 DP/PN representation

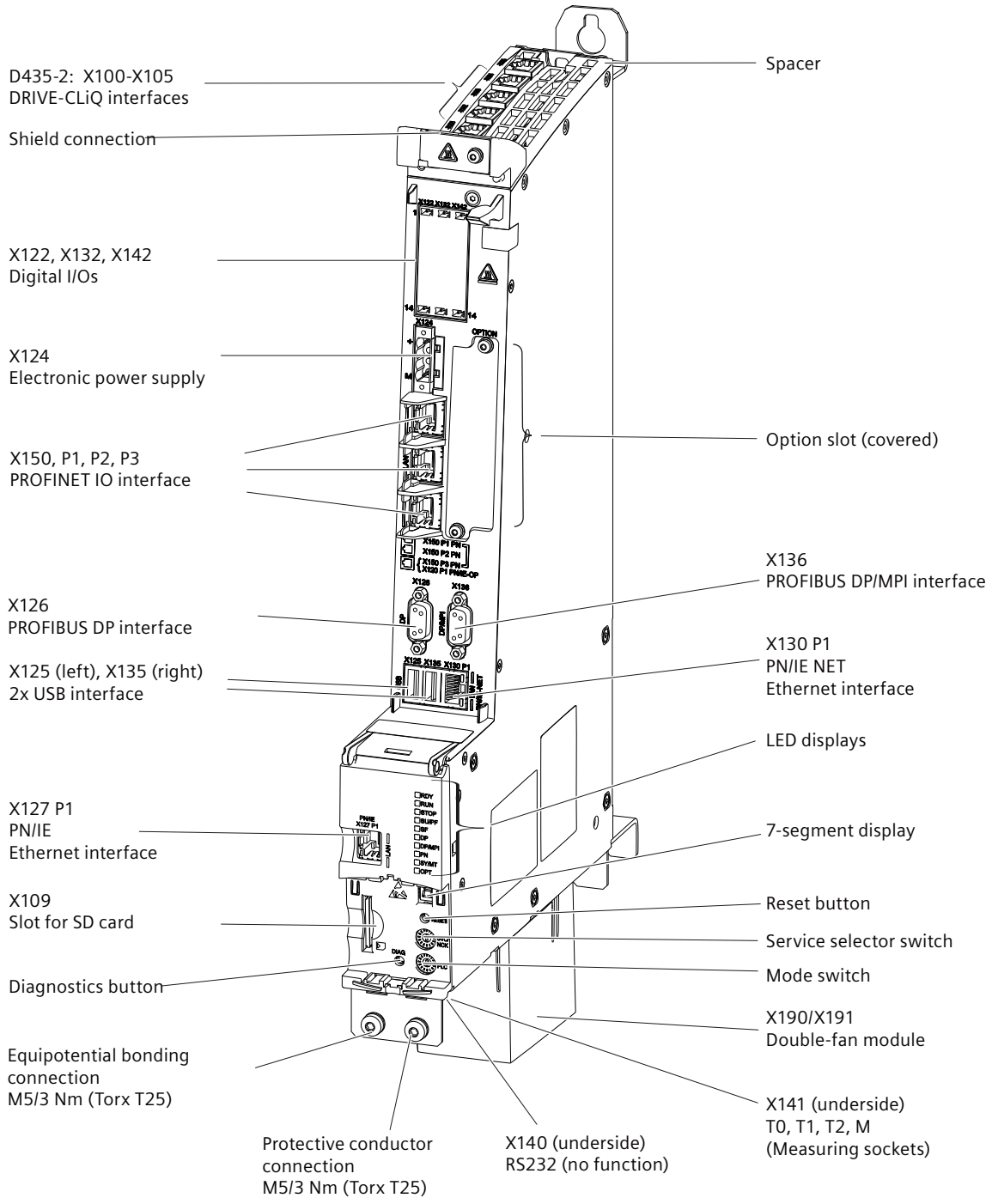

Figure 2-4 Representation of D435-2 DP/PN version (-0AA2)

Note

SIMOTION D425-2 DP/PN and D435-2 DP/PN must be operated with a double fan/battery module for heat dissipation. Without this module, the Control Units will not start up and cannot be commissioned.

Information on how to install the double fan/battery module can be found in "Supplementary system components", in Section Installing the fan/battery module (Page 114).

Note

The SIMOTION D425-2 DP/PN and D435-2 DP/PN are supplied with pre-assembled spacers. These can be removed if necessary.

For further details, see the *SIMOTION D4x5-2* Commissioning and Hardware Installation Manual.

2.6 Representation of SIMOTION D445-2 DP/PN and D455-2 DP/PN

The following figure shows the SIMOTION D445-2 and D455-2 with its interfaces and front panel elements (fault and status displays).

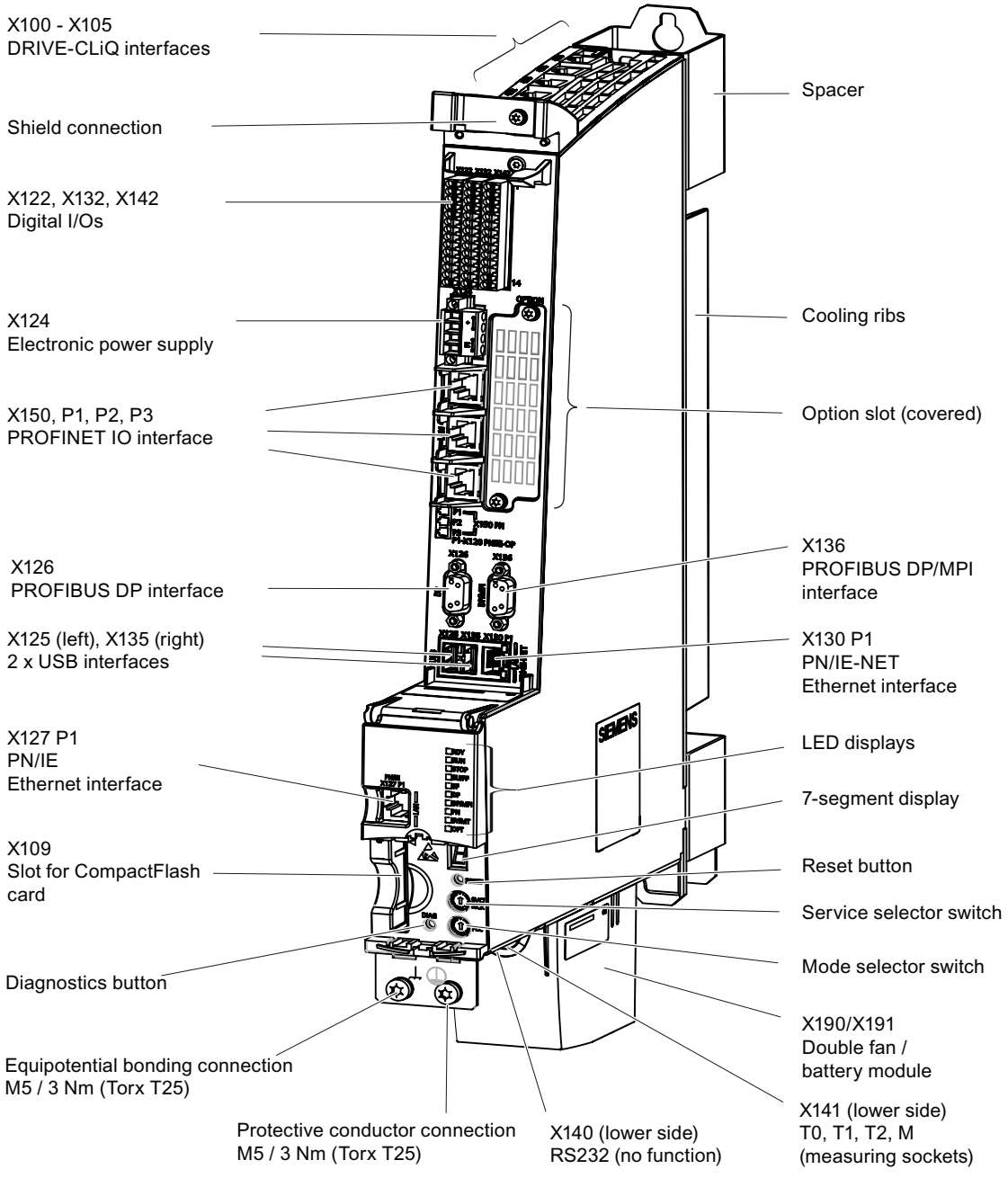

Figure 2-5 Representation of D445-2 DP/PN and D455-2 DP/PN

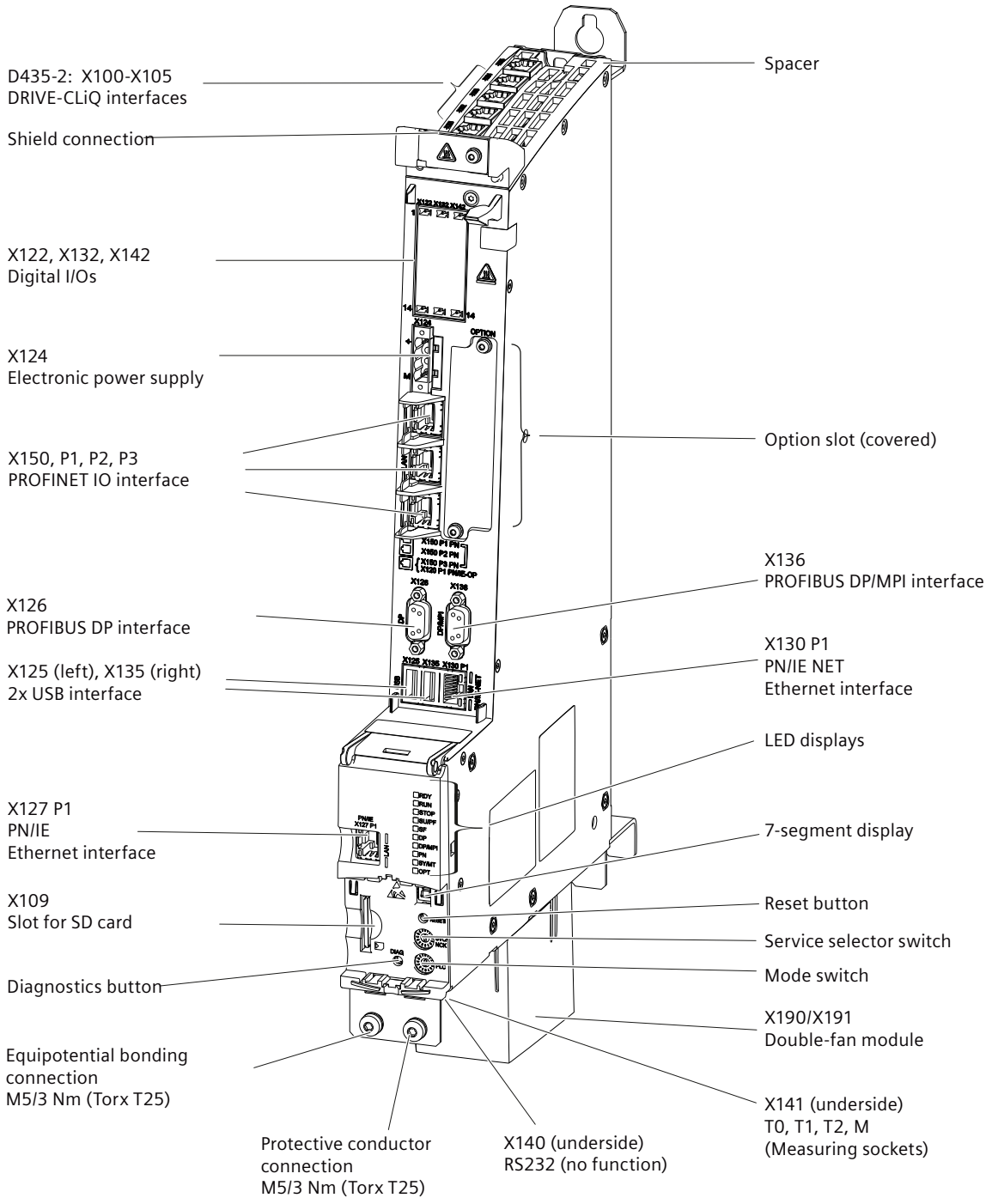

Figure 2-6 Representation of D455-2_DP/PN version (-0AA2)

Note

SIMOTION D445-2 DP/PN and D455-2 DP/PN must be operated with a double fan/battery module for heat dissipation. Without this module, the Control Units will not start up and cannot be commissioned.

Information on how to install the double fan/battery module can be found in "Supplementary system components", in Section Installing the fan/battery module (Page 114).

Note

With the D445-2 DP/PN and D455-2 DP/PN, the spacers can only be removed with the "external air cooling" installation method. In this installation method, the cooling fins are inserted through a cutout in the rear cabinet panel.

For further details, see the *SIMOTION D4x5-2* Commissioning and Hardware Installation Manual.

2.7 Type plates

Side-mounted rating plate

The following figure shows the information contained on the rating plate mounted on the side of the housing.

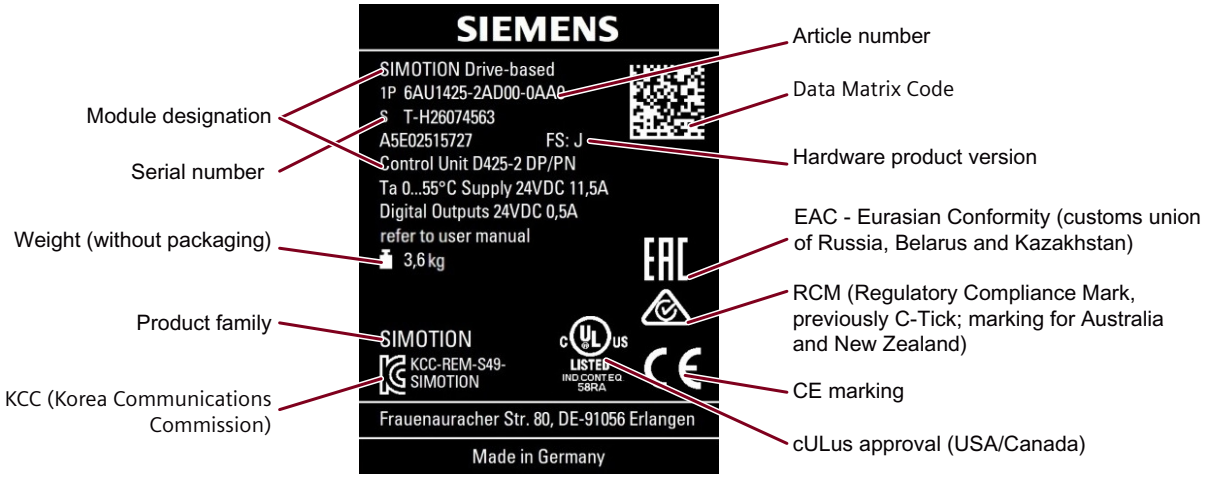

Figure 2-7 Rating plate using the D425-2 DP/PN as an example

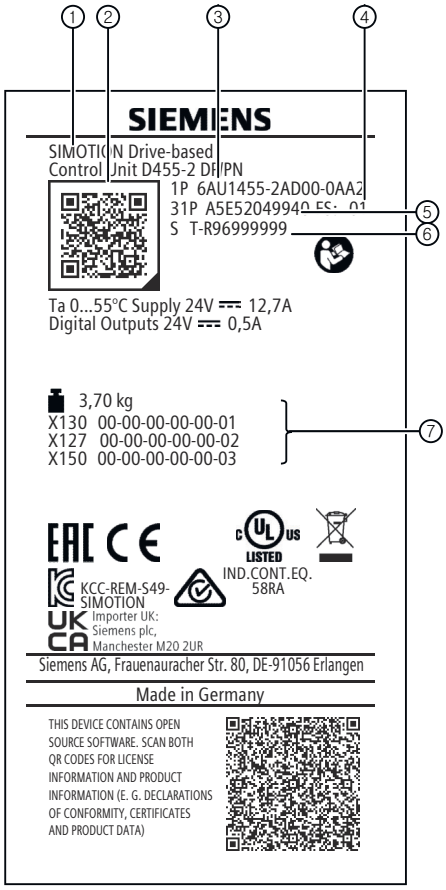

① Component name
② Product code
③ Article number
④ Version (functional state)
⑤ Material number
⑥ Serial number with production date. Here, for example, R = 2023, 9 = September, See table "Production date"
⑦ MAC addresses

Figure 2-8 Rating plate using the example of D455-2_DP/PN version (-0AA2) with QR code for the digital rating plate

Note

The information contained in each field of the rating plate on your actual Control Unit may differ from that presented in this manual (for example, a later product version, approvals and marks that have not yet been earned, etc. may be shown).

Depending on the rating plate, the HW version may be designated as "Version" or "FS" (Function State). Older components are marked with C-Tick instead of RCM. Depending on the module, the serial number is only on the front rating plate, which is also visible when the module is installed.

Front rating plate

A second rating plate for the MAC addresses of the Ethernet interfaces and the PROFINET IO interface is attached to the front of the device. You see this rating plate when you open the front cover of the Control Unit.

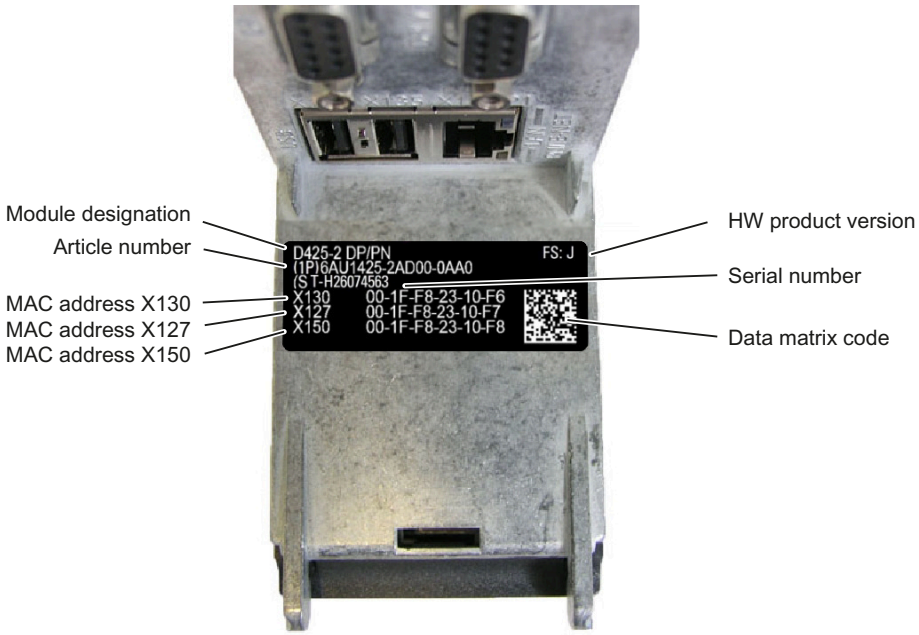

Figure 2-9 MAC addresses of SIMOTION D425-2 DP/PN

Note

For SIMOTION D4x5-2 DP, the MAC address for the X120 interface is printed instead of the MAC address for the X150 interface.

Depending on the rating plate, the HW version may be designated as "Version" or "FS" (Function State).

Production date

The production date can be derived from the following assignment:

Table 2-9 Production year and month

Character	Production year	Character	Production month
A	2010	1 to 9	January to September
B	2011	O	October
C	2012	N	November
D	2013	D	December

Character	Production year	Character	Production month
E	2014		
F	2015		
H	2016		
J	2017		
K	2018		
L	2019		
M	2020		
N	2021		
P	2022		
R	2023		
S	2024		
T	2025		

The serial number is stamped on the nameplate.

Industry Online Support app

With our app, you have access to more than 300,000 documents.

Scan the data matrix code and display all the technical information on this product incl. graphic data (CAx data). Link to the app: https://support.industry.siemens.com/sc/en/en/sc/2067

2.8 CompactFlash card

2.8.1 Usage and function of the CompactFlash Card

The CompactFlash card (CF card) is inserted in the slot with the designation CF (X109 interface).

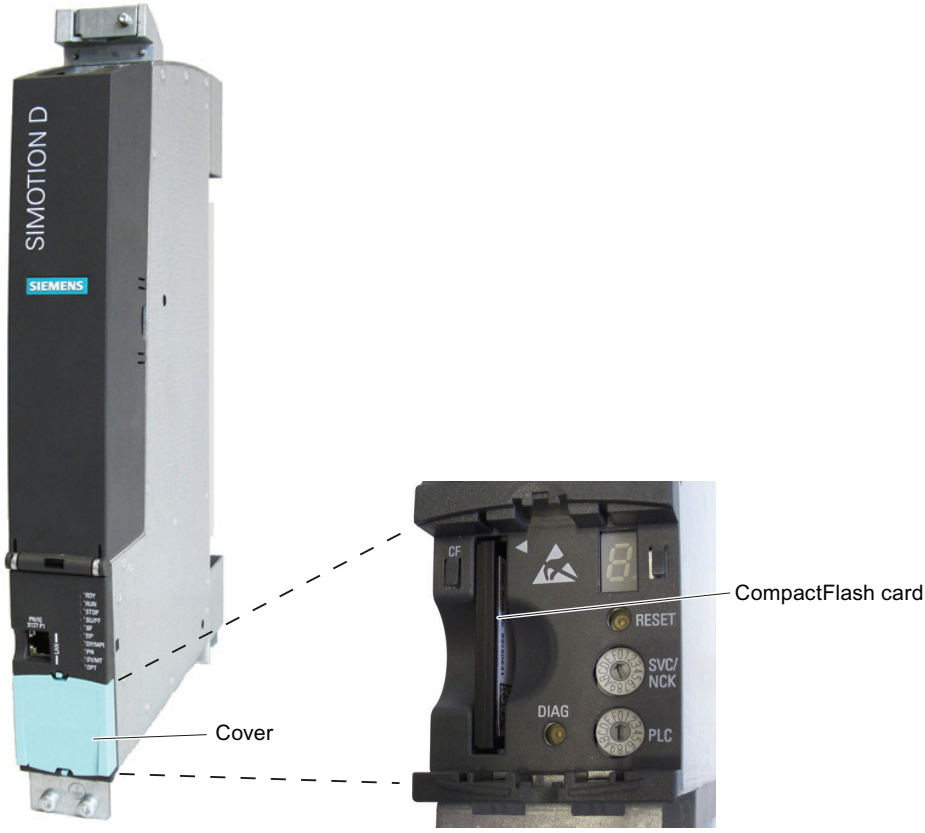

D4x5-2,
Operating elements covered

Operating elements, without cover

Figure 2-10 Slot for CompactFlash card

The CF card does not extend beyond the housing. An ergonomic recessed grip enables the CF card to be removed.

Characteristics of the CF card

The CF card is essential for operation of the SIMOTION D4x5-2. The CF card is not supplied with the SIMOTION D4x5-2 and must be ordered separately.

The SIMOTION Kernel (SIMOTION D4x5-2 firmware) and the software used to control the drives (SINAMICS firmware) are contained on the CF card.

The CF card is used for

- Backing up the technology packages and user data (programs, configuration data, parameter assignments).
- Update (e.g. SIMOTION firmware update).

The licenses for the technology functions are linked to the serial number of the CF card. This means the CF card can be inserted in a different SIMOTION D without having to change the licenses.

The CF card is supplied in a bootable format with the latest SIMOTION Kernel and drive software. Please note that a CF card with a D4x5 kernel/drive software cannot run on a D4x5-2. The same applies for the reverse situation.

If an error occurs, all LEDs flash yellow with 2 Hz. An entry is also made in the diagnostic buffer and the D4x5-2 does not start.

Licenses purchased for SIMOTION D can be used for both the D4x5 and D4x5-2.

NOTICE
Damage to the CompactFlash card from electrical fields or electrostatic discharge The CompactFlash card is an ESD-sensitive component. De-energize the SIMOTION D4x5-2 device before inserting or removing the CompactFlash card. The SIMOTION D4x5-2 is in a de-energized state when all the LEDs are off. Comply with the ESD rules.

Additional information

For additional information about inserting, changing, writing and formatting the CF card, see the *SIMOTION D4x5-2* Commissioning and Hardware Installation Manual.

2.8.2 CompactFlash card

CF card

CF cards with different storage capacities are available for SIMOTION D4x5-2.

- 2 GB CF, article number 6AU1400-2QA20-0AA0
- 1 GB CF, article number 6AU1400-2PA23-0AA0
- 1 GB CF, article number 6AU1400-2PA22-0AA0
- 1 GB CF, article number 6AU1400-2PA21-0AA0

You will find detailed information on the compatibility relationships for the CF card, boot loader version, SIMOTION D hardware and SIMOTION firmware version in the software compatibility list.

This list can be found on the Internet at (https://support.industry.siemens.com/cs/ww/en/view/18857317).

Type plate information

The following figure shows you all the information contained on the rating plate of the CF card.

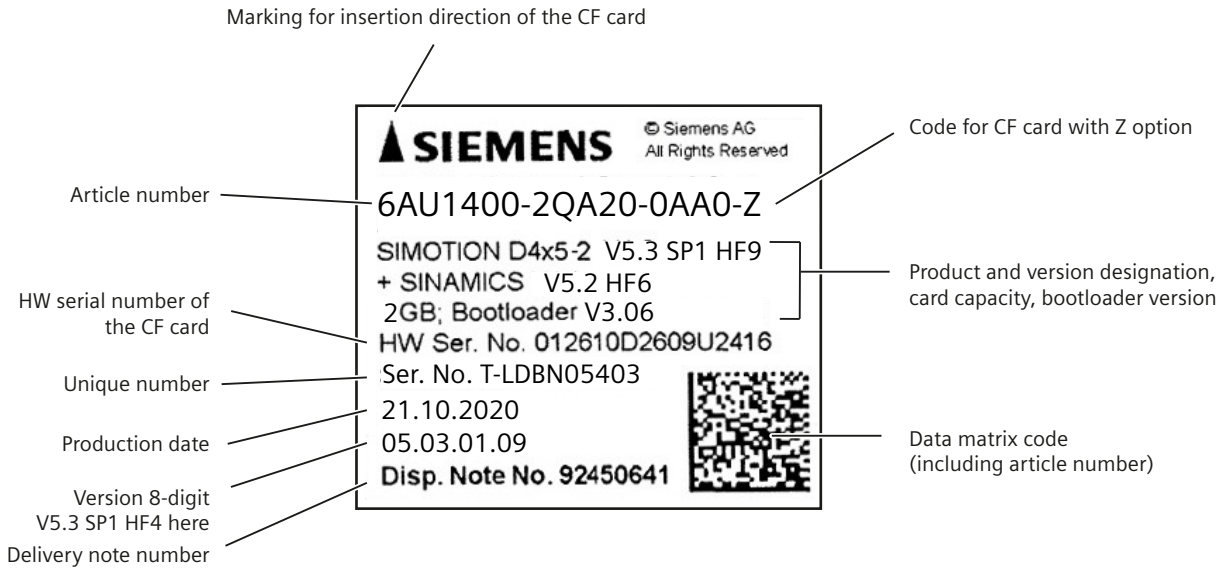

Figure 2-11 Rating plate of the CF card (example of 2 GB CF card)

Pre-installed runtime licenses

The preinstalled licenses are printed on the packaging below the article number as Z options.

Example

Example with MultiAxes package Z option for D445/D445-1/D445-2/D455-2 + two TControl licenses:

- 6AU1400-2QA20-0AA0-Z

- Z=M44+T02

A maximum of seven different Z options are printed on the label of the CF card. When there are more than seven different Z options, the text "Z = see delivery order" is printed on the CF card in place of the Z options.

Available Z options / licenses for CF cards

- Axis licenses
  - Pxx license POS and number (e.g. P02=2x POS license)
  - Gxx license GEAR and number (e.g. G03=3x GEAR license)
  - Cxx license CAM and number (e.g. C01=1x CAM license)
- MultiAxes Package
  - M00 license MultiAxes Package (platform independent)
  - M42 license MultiAxes Package for D425/D425-2
  - M43 license MultiAxes Package for D435/D435-2 (incl. D425/D425-2)
  - M44 license MultiAxes Package for D445/D445-1/D445-2/D455-2 (incl. D425/D425-2 and D435/D435-2)
- MultiAxes and Safety Extended Package
  - S42/S43/S44 license as M42/M43/M44 license, but also includes licensing of the Safety Integrated Extended Functions for all drives on SINAMICS Integrated/CX32-2. Licenses for Safety Integrated Advanced Functions are not included; they must always be ordered as single licenses.
- TControl temperature control
  - Txx license TControl and number (e.g. T03=3x TControl license)
- SIMOTION IT
  - J00 license SIMOTION IT Virtual Machine for Java applications
- Safety functions
  - Fxx license for SINAMICS Safety Integrated Extended Functions (for integrated SINAMICS drives and CX32-2 for SIMOTION D) (e.g. F02=2x Safety Integrated Extended Functions).
  - Lxx license for SINAMICS Safety Integrated Advanced Functions (for integrated SINAMICS drives and CX32-2 for SIMOTION D) (e.g. L03=3x Safety Integrated Advanced Functions). The Safety Integrated Advanced Functions also include the Safety Integrated Extended Functions.
- High output frequency
  - H00 license SINAMICS high output frequency for SIMOTION D
- Other SIMOTION licenses
  - B02 license Multipurpose Information Interface (MIIF) communication function
  - B03 license Vibration damping of axes (VIBX Vibration Extinction)
  - B04 license Motion profiles for servo presses (OACAMGEN cam generation)
  - B07 license Compensation of cyclic errors from the production process (LECo – Learning Error Compensation)

SINAMICS licenses

Selected SINAMICS licenses can be used with a SIMOTION D CF card. Only one relicensing is possible. A prelicensing of SIMOTION D CF cards via Z options is not possible with SINAMICS licenses.

Examples:

- SINAMICS S120 Advanced Position Control (APC)
  Article no. 6SL3074-0AA05-0AA0
  License for each drive (on CU, SINAMICS Integrated, CX32-2)
- SINAMICS S120 cogging torque compensation
  Article no. 6SL3074-0AA15-0AA0
  License for each drive (on CU, SINAMICS Integrated, CX32-2)
- SINAMICS Technology Extension "Vibration Extinction" (VIBX)
  Article no. 6SL3077-0AA00-5AB0
  License for a target device (CU, SINAMICS Integrated, CX32-2)
- SINAMICS DCB Extension
  Article no. 6SL3077-0AA00-0AB0
  License for a target device (CU, SINAMICS Integrated, CX32-2)

With SINAMICS licenses, under-licensing of SINAMICS Integrated/CX32-2 is indicated by the flashing SF LED on the SIMOTION D Control Unit. An entry is also made in the diagnostics buffer and the under-licensing is indicated in the License dialog of SIMOTION SCOUT. The licensing is performed (as for SIMOTION licenses) via SIMOTION SCOUT or via the SIMOTION license key on the CF card.

2.9 SD card

2.9.1 Usage and function of the SD card

The Secure Digital Memory Card (SD card) is inserted in the plug-in slot with designation SD (interface X109).

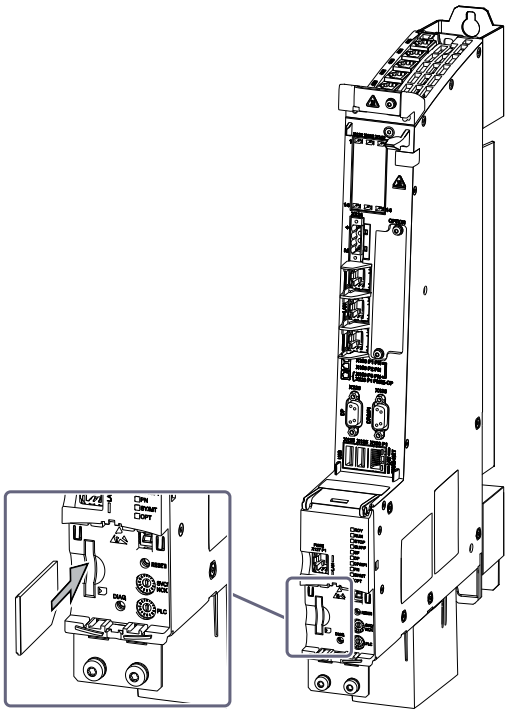

Figure 2-12 Insert SD card

Properties of the SD card

The SD card is essential for operation of the SIMOTION D4x5-2 (-0AA2). The SD card must be ordered as a separate component and is not included in the SIMOTION D4x5-2 (-0AA2) scope of delivery.

The SD card contains the SIMOTION Kernel (SIMOTION D4x5-2 (-0AA2) firmware) and the software for controlling the drives (SINAMICS firmware).

The SD card is used for

- Backing up the technology packages and user data (programs, configuration data, parameterizations).
- Updates (e.g. SIMOTION firmware update).

The licenses for the technology functions are linked to the serial number of the SD card. This means the SD card can be inserted in a different SIMOTION D without having to change the licenses.

The SD card is supplied in a bootable format with the latest SIMOTION Kernel and drive software. Note that an SD card with a D4x5 kernel/drive software cannot run on a D4x5-2 (-0AA2). The same applies for the reverse situation.

If an error occurs, all LEDs flash yellow at 2 Hz. An entry is also made in the diagnostic buffer and the D4x5-2 (-0AA2) does not start.

Licenses purchased for SIMOTION D can be used for both the D4x5 and D4x5-2 (-0AA2).

NOTICE
SD card damage caused by electric fields or electrostatic discharge The SD card is an ESD component. De-energize the SIMOTION D4x5-2 (-0AA2) device before inserting or removing the SD card. SIMOTION D4x5-2 (-0AA2) is in a de-energized state when all LEDs are off. Comply with the ESD rules.

More information

For information on inserting, changing, writing, and formatting the SD card, see the *SIMOTION D4x5 2* Commissioning and Hardware Installation Manual.

2.9.2 SD card

SD card

The following memory card is available for SIMOTION D4x5-2 (-0AA2):

- 8 GB SD, article number 6AU1400-3SA20-0AA0

You will find detailed information on the compatibility relationships for the SD card, bootloader version, SIMOTION D hardware, and SIMOTION firmware version in the software compatibility list.

This list can be found on the Internet at (https://support.industry.siemens.com/cs/ww/en/view/18857317).

Type plate information

The following figure describes all the information contained on the type plate of the SD card.

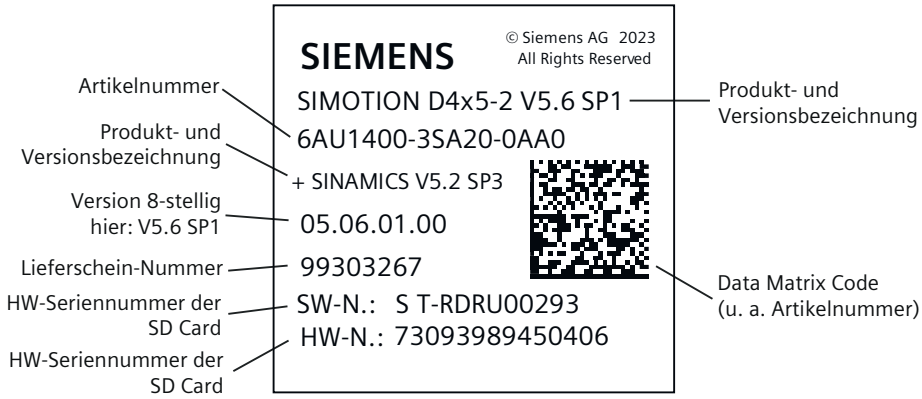

Figure 2-13 Type plate of the SD card

Slider for setting the cable shield:

- Slider up: Not write-protected ①
- Slider down: Write-protected ②

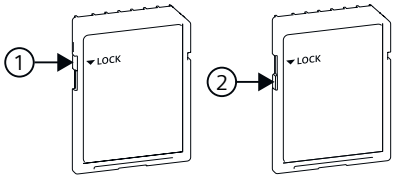

Pre-installed runtime licenses

The preinstalled licenses are printed on the packaging below the article number as Z options.

Example

Example with MultiAxes package Z option for D445/D445-1/D445-2/D455-2 + two TControl licenses:

- 6AU1400-2QA20-0AA0-Z

- Z=M44+T02

A maximum of seven different Z options can be printed on the type plate of the SD card. When there are more than seven different Z options, the text "Z=see delivery order" is printed on the SD card in place of the Z options.

Available Z options/licenses for SD cards

- Axis licenses
  - Pxx license POS and number (e.g. P02=2x POS license)
  - Gxx license GEAR and number (e.g. G03=3x GEAR license)
  - Cxx license CAM and number (e.g. C01=1x CAM license)
- MultiAxes Package
  - M00 license MultiAxes Package (platform independent)
  - M42 license MultiAxes Package for D425/D425-2
  - M43 license MultiAxes Package for D435/D435-2 (incl. D425/D425-2)
  - M44 license MultiAxes Package for D445/D445-1/D445-2/D455-2 (incl. D425/D425-2 and D435/D435-2)
- MultiAxes and Safety Extended Package
  - S42/S43/S44 license as M42/M43/M44 license, but also includes licensing of the Safety Integrated Extended Functions for all drives on SINAMICS Integrated/CX32-2. Licenses for Safety Integrated Advanced Functions are not included; they must always be ordered as single licenses.
- TControl temperature control
  - Txx license TControl and number (e.g. T03=3x TControl license)
- SIMOTION IT
  - J00 license SIMOTION IT Virtual Machine for Java applications
- Safety functions
  - Fxx license for SINAMICS Safety Integrated Extended Functions (for integrated SINAMICS drives and CX32-2 for SIMOTION D) (e.g. F02=2x Safety Integrated Extended Functions).
  - Lxx license for SINAMICS Safety Integrated Advanced Functions (for integrated SINAMICS drives and CX32-2 for SIMOTION D) (e.g. L03=3x Safety Integrated Advanced Functions). The Safety Integrated Advanced Functions also include the Safety Integrated Extended Functions.
- High output frequency
  - H00 license SINAMICS high output frequency for SIMOTION D
- Other SIMOTION licenses
  - B02 license Multipurpose Information Interface (MIIF) communication function
  - B03 license Vibration damping of axes (VIBX Vibration Extinction)
  - B04 license Motion profiles for servo presses (OACAMGEN cam generation)
  - B07 license Compensation of cyclic errors from the production process (LECo – Learning Error Compensation)

SINAMICS licenses

Selected SINAMICS licenses can be used with a SIMOTION D SD card. Only one relicensing is possible. A prelicensing of SIMOTION D SD cards via Z options is not possible with SINAMICS licenses.

Examples:

- SINAMICS S120 Advanced Position Control (APC)
  Article no. 6SL3074-0AA05-0AA0
  License for each drive (on CU, SINAMICS Integrated, CX32-2)
- SINAMICS S120 cogging torque compensation
  Article no. 6SL3074-0AA15-0AA0
  License for each drive (on CU, SINAMICS Integrated, CX32-2)
- SINAMICS Technology Extension "Vibration Extinction" (VIBX)
  Article no. 6SL3077-0AA00-5AB0
  License for a target device (CU, SINAMICS Integrated, CX32-2)
- SINAMICS DCB Extension
  Article no. 6SL3077-0AA00-0AB0
  License for a target device (CU, SINAMICS Integrated, CX32-2)

With SINAMICS licenses, under-licensing of SINAMICS Integrated/CX32-2 is indicated by the flashing SF LED on the SIMOTION D Control Unit. An entry is also made in the diagnostics buffer and the under-licensing is indicated in the License dialog of SIMOTION SCOUT. The licensing is performed (as for SIMOTION licenses) via SIMOTION SCOUT or via the SIMOTION license key on the SD card.

2.10 Data matrix code

SIMOTION D components (e.g. CF cards/SD cards, Control Units, etc.) have machine-readable identification in the form of a data matrix code (2D-code).

Reader units that support the data matrix code in accordance with ECC 200 are suitable for reading the code used here.

The volume of the information contained in the data matrix code depends on the product and, for example, on the available space.

Analysis

Example of a data string from the reader unit:

1P6AU1400-2QA20-0AA0-Z+ST-LDBN05403+30S012610D2609U2416.

Table 2-10 Machine-readable identification via 2D code

Characteristic	Property (example)
Article number ("1P" identifier to identify the products)	6AU1400-2QA20-0AA0-Z
Serial number ("S" identifier, item number)	T-LDBN05403

Characteristic	Property (example)
Hardware serial number (CF cards/SD cards only) ("30S" identifier)	012610D2609U2416
Hardware version (identifier 2PE)	Not used in the example
Material number (identifier P)	Not used in the example

In addition to the "serial number", CF cards/SD cards also have a "hardware serial number".

If licenses are purchased for licensed functions, a "license key" is generated from the hardware serial number of the CF card/SD card and the serial number of the purchased licenses. Such licenses are valid only for the associated CF card/SD card.

The data required for the licensing can be read by a reader unit via the bar codes on the license certificates (Certificate of License "CoL") and the 2D code on the CF card/SD card in order, for example, to automate the licensing process.

Industry Online Support app

With our app, you have access to more than 300,000 documents.

Scan the data matrix code and display all the technical information on this product incl. graphic data (CAx data). Link to the app: https://support.industry.siemens.com/sc/en/en/sc/2067

Operator control (hardware) 3

3.1 Overview of operator control and display elements

The following figure shows the arrangement of the operator control and display elements of a SIMOTION D445-2 DP/PN.

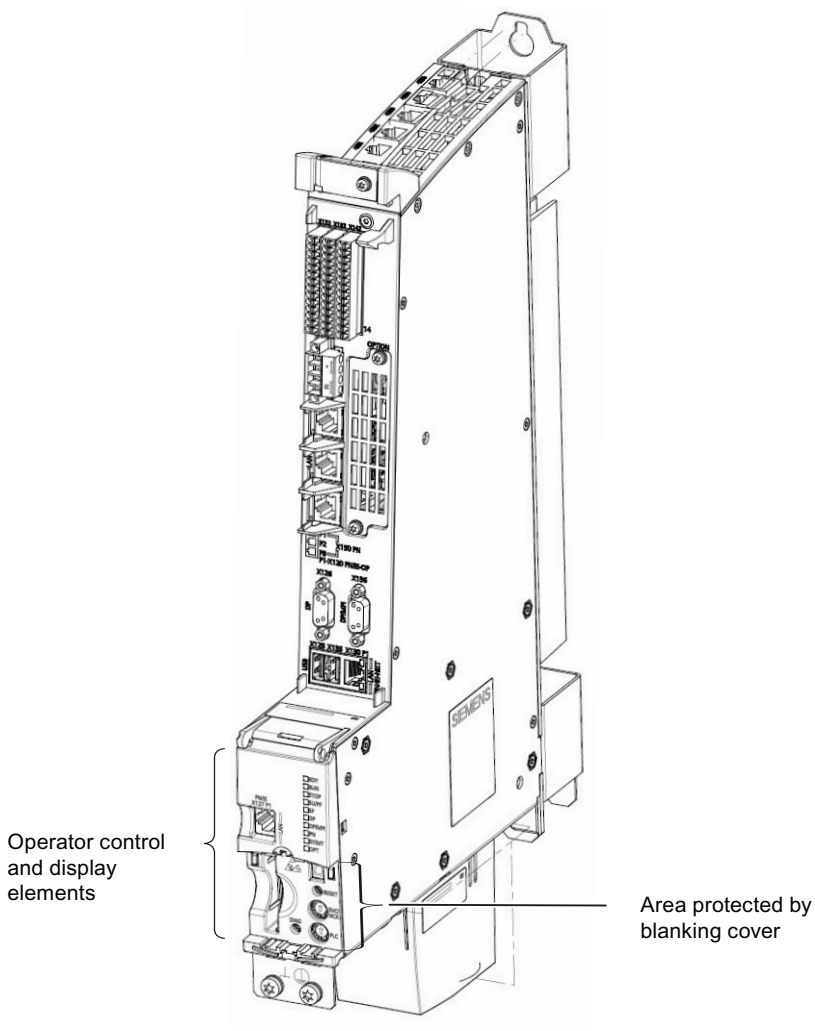

Figure 3-1 Position of operator control and display elements (example of SIMOTION D445-2 DP/PN)

The lower part of the operator control and display elements has a blanking cover during operation. This cover is removed for service work.

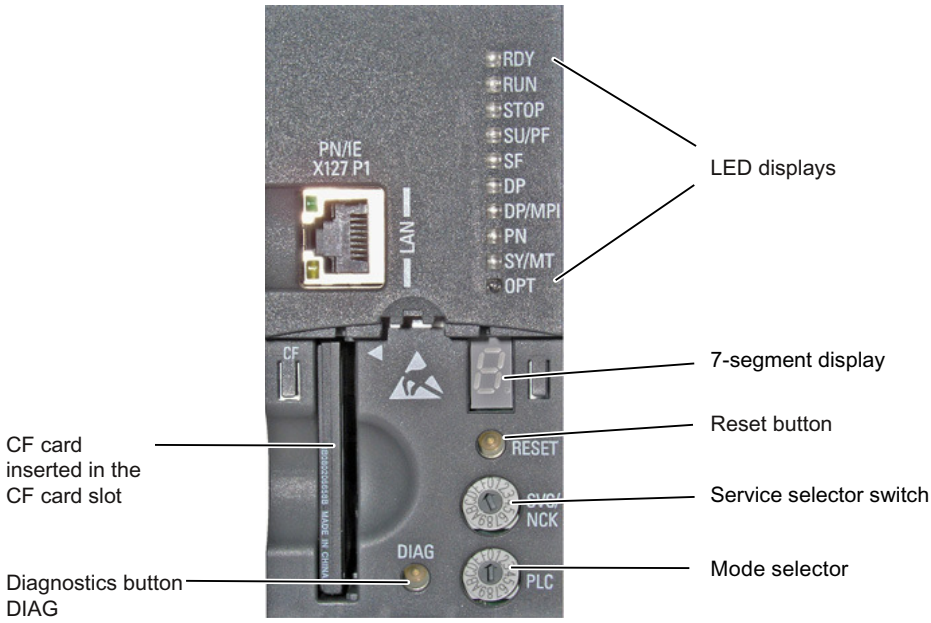

Figure 3-2 Control and display elements of the SIMOTION D4x5-2

3.2 Operator controls

3.2.1 Service and operating mode switch

Characteristics of the Service switch and mode switch

SIMOTION D4x5-2 has two selector switches on the lower front side for selection of the service functions and operating modes.

The upper selector switch (labelled SVC/NCK) is for the selection of service and diagnostic functions. In "normal" operation this switch must remain in the 0 position (see figure below).

The lower switch, labelled PLC, is used to set one or more operating modes of the SIMOTION D4x5-2.

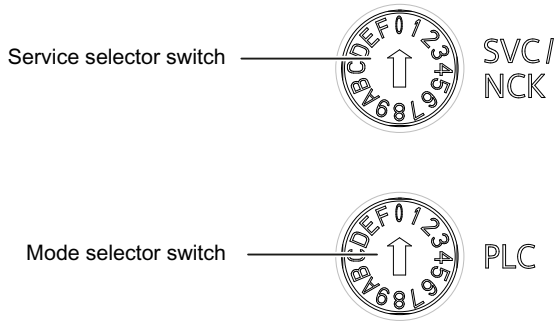

Figure 3-3 Selector switches for service and operating modes of the SIMOTION D4x5-2

NOTICE
Damage from electrostatic discharge
The rotary switch can be destroyed by static electricity.
Operate the rotary switch only with an insulated screwdriver.
Comply with the ESD rules.

Mode switch

The following table contains the possible mode switch positions and the associated LED displays. The mode switch positions are explained in the order in which they are arranged on the SIMOTION D4x5-2.

Table 3-1 Mode switch position

Switch position	Meaning	LED
0	RUN	RUN
1	STOPU	SU/PF
2	STOP	STOP
3	MRES	The MRES operating states are indicated on the STOP LED (on/off/ flashing, see *SIMOTION D4x5-2* Commissioning and Hardware Installation Manual)
Other selector positions are not assigned		

The following table contains the states of the SIMOTION D4x5-2 that can be set via the mode switch.

Table 3-2 Mode switch settings

Meaning	Explanations
RUN	SIMOTION D4x5-2 processes the user program and the associated system services: • Reading process image of inputs • Execution of the user programs assigned to the execution system. • Writing process image of outputs The technology packages are active in this state. They can execute commands from the user program.
STOPU	SIMOTION D4x5-2 is not processing a user program. • The technology packages are active. Test and commissioning functions can be executed. The user program is not active. • The I/O modules are in the safe state (this means, for example, digital outputs are "LOW" and analog outputs are de-energized or at zero current).
STOP	SIMOTION D4x5-2 is not processing a user program. • It is possible to load a complete user program. • All system services (communications, etc.) are active. • The I/O modules are in the safe state (this means, for example, digital outputs are "LOW" and analog outputs are de-energized or at zero current). • The technology packages are inactive, i.e. all enables are deleted. No axis motions can be executed.
MRES	Performing a memory reset on the SIMOTION D4x5-2 / restoring the factory setting Using the MRES switch position, you can perform depending on the operating sequence • Memory reset of the SIMOTION D4x5-2 or • Restore the SIMOTION D4x5-2 to its factory setting, depending on the operating sequence. For further details, see the *SIMOTION D4x5-2* Commissioning and Hardware Installation Manual.

Note

It is recommended that SIMOTION SCOUT be used exclusively to switch the operating modes of the module. Therefore, leave the mode switch at position 0 (RUN). The LED display indicates the current mode selection.

For information on how to set the operating state using SIMOTION SCOUT, see the *SIMOTION SCOUT* Configuration Manual.

Service selector switch

The following table shows the possible positions of the service selector switch. The service selector switch positions are explained in the order in which they are arranged on the SIMOTION D4x5-2.

Table 3-3 Switch positions of the service selector switch

Service mode	Switch position	Meaning	
-	0	No service/diagnostic functions activated (default setting)	
Delete/restore non-volatile SIMOTION data	1 or A → 1	When the "Delete/restore non-volatile SIMOTION data" switch setting is selected, the non-volatile data of the D4x5-2 is first deleted and then restored along with the contents of the PMEMORY backup file.	
		Position "1":	The data backed up with the system function _savePersistentMemoryData is preferably restored
		Position "A" → "1": (as of V4.4)	The data backed up by service selector switch position "D" / Web server / DIAG pushbutton are preferably restored
Web server in Security Level Low	8	Switches the SIMOTION IT Web server to Security Level Low for 120 minutes. You will find detailed information in the *SIMOTION IT Diagnostics and Configuration* Diagnostics Manual.	
Downgrade (Device Update Tool)	B	SIMOTION D4x5-2 control units and projects can be upgraded using upgrade data created at an earlier point in time. This upgrade data is generated with the Device Update Tool (Menu: "Project>Start Device Update Tool" in SIMOTION SCOUT). If the upgrade process fails to bring about the desired result, the upgrade can be rejected by means of the switch position. This will roll the system back to the previous configuration.	
Backup of diagnostic data and non-volatile SIMOTION data	D	The diagnostic data and non-volatile SIMOTION data can be backed up in STOP, STOPU, and RUN state. The advantage of backing up in RUN state is the availability of enhanced diagnostic information (via HTML pages) and TO alarm information.	

Note

Alternatively, diagnostic data and non-volatile SIMOTION data can also be backed up via the DIAG button, see Section DIAG button (Page 62).

Additional references

You will find detailed information on the individual topics in the following table:

Table 3-4 References

Subject	Reference
Setting of the operating modes	• *SIMOTION SCOUT* Configuration Manual
Upgrading devices (Device Update Tool)	• *Upgrading SIMOTION Devices* Operating Instructions and • *SIMOTION D4x5-2* Commissioning and Hardware Installation Manual
• Creating diagnostic data and • Saving/restoring non-volatile SIMOTION data	• *SIMOTION D4x5-2* Commissioning and Hardware Installation Manual

3.2.2 DIAG button

Layout

The DIAG button is located behind the blanking cover on the SIMOTION D4x5-2.

Function

The DIAG button is used to save the diagnostics data and non-volatile SIMOTION data to the CF card/SD card.

The DIAG button function therefore corresponds to the function of switch position "D" of the Service selection switch.

Various options are available for backing up the data:

- Option 1: Backup during operation (in STOP/STOPU/RUN operating state)
- Option 2: Backup during the module startup

With option 1, the DIAG button only has to be pressed briefly to trigger the data backup. The DIAG button is therefore preferable to switch position "D" of the Service selection switch.

With option 2, the DIAG button has to be pressed until the boot procedure is completed. As this can take 20-30 seconds, switch position "D" is preferable here.

Additional references

For detailed information on creating diagnostics data and backing up / restoring non-volatile SIMOTION data, refer to the *SIMOTION D4x5-2* Commissioning and Hardware Installation Manual.

3.2.3 RESET button

Arrangement

The RESET button is located behind the blanking cover on the SIMOTION D4x5-2.

Performing a reset operation

A reset causes the entire system to be reset and requires the system to be ramped-up again. It is similar to a "Power On Reset" except that the 24 V power supply does not have to be switched off.

3.3 7-segment and LED displays

Arrangement of the displays

The front side of the SIMOTION D4x5-2 has ten LED displays arranged arranged vertically in one row. There is also a 7-segment display below the blanking cover.

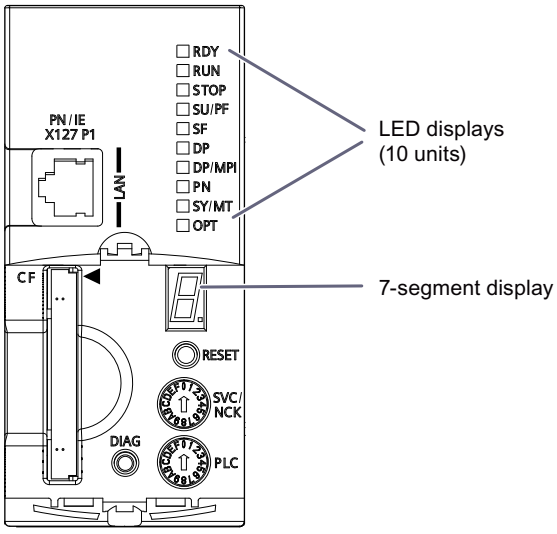

Figure 3-4 7-segment and LED display on the SIMOTION D4x5-2

Meaning of the LED displays

This table describes the LEDs and their meaning. The PN and *SY* LEDs have no function for SIMOTION D4x5-2 DP.

Table 3-5 Error and status displays

LED	Meaning
RDY	Operating states of SIMOTION D incl. SINAMICS Integrated.
RUN	User program is running

LED	Meaning
STOP	No user program is running. The technology packages are not active
SU/PF	The technology packages are active. The user program is not active
SF	An error state of the SIMOTION D4x5-2
DP	State of the PROFIBUS DP interface
DP/MPI	State of the PROFIBUS DP/MPI interface
PN	State of the onboard PROFINET IO interface (X150)
SY/MT	- Synchronization status (SY) of the onboard PROFINET IO interface (X150) - Maintenance status (MT) of the D4x5-2 (currently without function)
OPT	State of the option module (if available).

Note

While the SIMOTION D4x5-2 is ramping up, all LEDs are briefly illuminated in yellow.

7-segment display

The 7-segment display provides further status information in addition to the LED displays.

The status "6" and a flashing "." indicate that the D4x5-2 has ramped up and communication has been established to the SINAMICS Integrated.

Additional information

You can perform a detailed diagnosis with a PG/PC and the engineering system. Information on the *Diagnostics* via LED displays can also be found in the *SIMOTION D4x5-2* Commissioning and Hardware Installation Manual and in the online help of this section via the link under the *Instructions* menu.

Interfaces

4

4.1 Interface overview

This section describes the interfaces of the SIMOTION D4x5-2.

The position of the interfaces on the module can be found in the following sections:

- Representation of SIMOTION D425-2 DP and D435-2 DP (Page 34)
- Representation of SIMOTION D425-2 DP/PN and D435-2 DP/PN (Page 36)
- Representation of SIMOTION D445-2 DP/PN and D455-2 DP/PN (Page 39)

Available interfaces

Table 4-1 Overview of available interfaces

Interface	Designation	Connector type
DRIVE-CLiQ interface	X100	DRIVE-CLiQ socket
DRIVE-CLiQ interface	X101	DRIVE-CLiQ socket
DRIVE-CLiQ interface	X102	DRIVE-CLiQ socket
DRIVE-CLiQ interface	X103	DRIVE-CLiQ socket
DRIVE-CLiQ interface (not for SIMOTION D425-2)	X104	DRIVE-CLiQ socket
DRIVE-CLiQ interface (not for SIMOTION D425-2)	X105	DRIVE-CLiQ socket
Ethernet interface PN/IE	X127 P1	RJ45 socket connector
PN/IE OP Ethernet interface (only for SIMOTION D4x5-2 DP)	X120 P1	RJ45 socket connector
Ethernet interface PN/IE-NET	X130 P1	RJ45 socket connector
PROFINET PN IO interface (only for SIMOTION D4x5-2 DP/PN)	X150 (P1, P2, P3)	RJ45 socket connector
Digital I/Os	X122, X132, X142	Mini Combicon, 3.5 mm 3x14-pin
Power supply connector	X124	Combicon, 4-pin
PROFIBUS DP interface	X126	9-pin Sub-D socket
PROFIBUS DP/MPI interface	X136	9-pin Sub-D socket
Measuring sockets (T0, T1, T2, and M)	X141	4-pin, socket
SIMOTION CF/SD slot	X109	CF card connector/SD card connector
Fan/battery module interface	X190/X191	Fan/battery module
USB interface 1	X125	USB socket

Interface	Designation	Connector type
USB interface 2	X135	USB socket
Option slot		Sockets

Note

The third port of the PROFINET X150 P3 IO interface has an additional caption for a SIMOTION D4x5-2 DP/PN. It is called X120 PN/IE-OP.

This designation is not relevant for SIMOTION D.

Non-usable interfaces

Table 4-2 Overview of interfaces that cannot be used for SIMOTION D

Interface name	Interface	Connector type
RS232 interface	X140	9-pin Sub-D connector

4.2 DRIVE-CLiQ interfaces

DRIVE-CLiQ interfaces

All SINAMICS S120 drive system components, including the motors and encoders, are interconnected by a shared serial interface called DRIVE-CLiQ. The standardized cables and connectors reduce the variety of different parts and cut storage costs.

DRIVE-CLiQ has the following properties:

- Automatic detection of components by the Control Unit
- Standardized interfaces to all components
- Uniform diagnostics down to the components
- Complete service down to the components
- 24 V / 450 mA per DRIVE-CLiQ interface are provided for the connection of encoders and measuring systems.
  Note:
  The DRIVE-CLiQ cable with 24 V supply is used only for components that require this (e.g. motors with a DRIVE-CLiQ interface).

Position of connectors

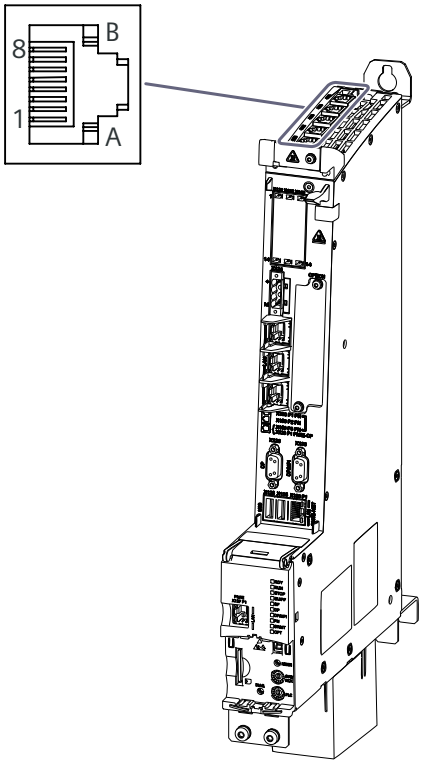

Figure 4-1 The position of the DRIVE-CLiQ interfaces on the D4x5-2 (example of D445-2 DP/PN (-0AA2))

Characteristics

Table 4-3 DRIVE-CLiQ interface X100 – X105 (D425-2: Only X100 - X103)

Characteristic	Type
Connector type	DRIVE-CLiQ connector (RJ45 socket)
Cable type	DRIVE-CLiQ standard (inside the cabinet)
Cable type	MOTION CONNECT (outside the cabinet)
Max. cable length	100 m
Dust protection filler plugs for sealing unused DRIVE-CLiQ ports	Five filler plugs contained in the D4x5-2 scope of delivery Filler plugs (50 pcs) article number: 6SL3066-4CA00-0AA0

DRIVE-CLiQ pin assignment

Table 4-4 DRIVE-CLiQ interface X100 – X105 (D425-2: Only X100 - X103)

PIN	Signal name	Signal type	Meaning
1	TXP	O	Send data +
2	TXN	O	Send data -
3	RXP	I	Receive data +
4	----	----	Reserved, do not use
5	----	----	Reserved, do not use
6	RXN	I	Receive data -
7	----	----	Reserved, do not use
8	----	----	Reserved, do not use
A	+ (24 V)	VO	Power supply for DRIVE-CLiQ, 450 mA maximum
B	M (0 V)	VO	Ground to 24 V
Signal type: I = Input; O = Output; VO = Voltage Output			

Additional references

- *SINAMICS S120 Control Units and Additional System Components* Manual
- *SINAMICS S120 Booksize Power Units* Manual
- *SINAMICS S120 for AC Drives* Manual
- *SINAMICS S120* Commissioning Manual
- *Terminal Modules TM15 and TM17 High Feature* Commissioning Manual
- *TM15/TM17 High Feature* Manual

4.3 PROFINET IO interface (only for SIMOTION D4x5-2 DP/PN)

PROFINET is an open component-based industrial communication system using Ethernet for distributed automation systems.

SIMOTION D4x5-2 DP/PN has a PROFINET interface with three ports (X150 P1-P3) onboard. The PROFINET interface supports operation of a SIMOTION D4x5-2 DP/PN as an IO controller and/or as an I device.

Interface position

The following figure contains information on the PROFINET interface of the control unit. Position of the interface, labeling of the ports and the associated displays are described.

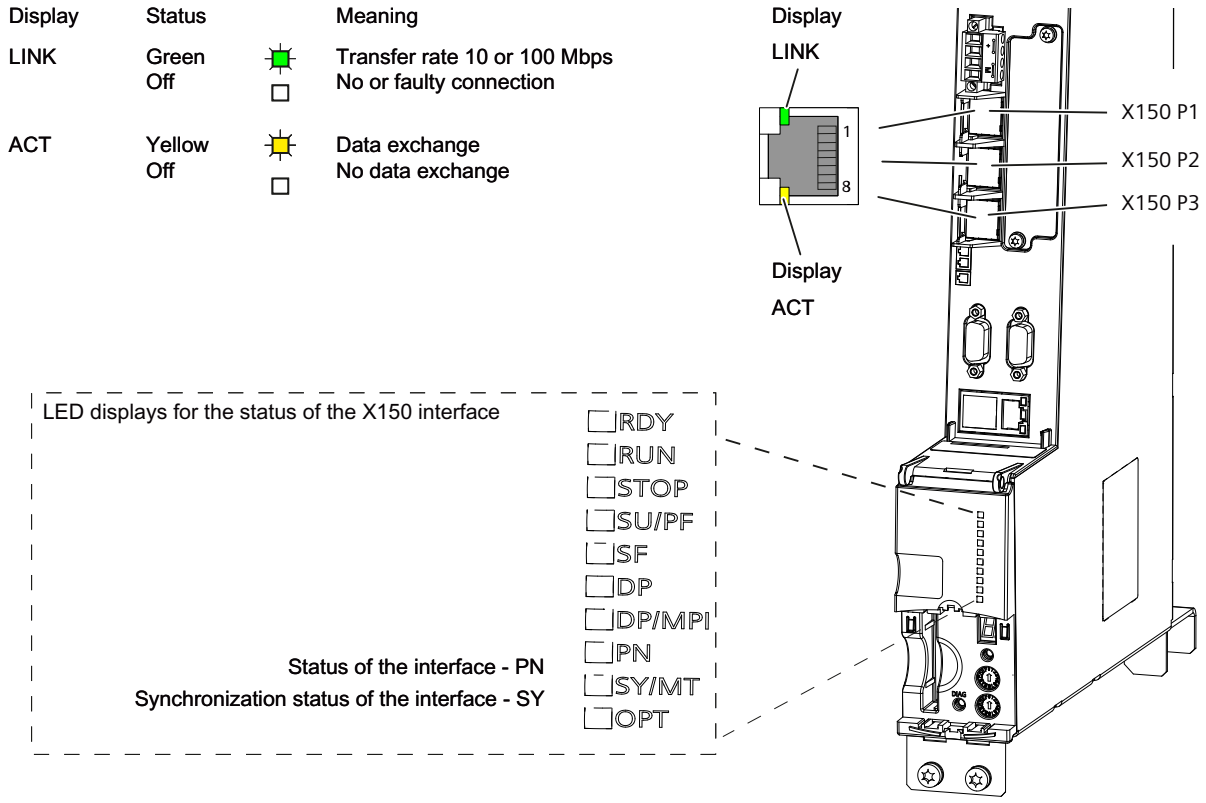

Figure 4-2 The position of the PROFINET X150 P1 to P3 interfaces and their displays (SIMOTION D445-2 DP/PN)

Note

The 3rd port of the PROFINET IO interface X150 P3 is also designated as X120 PN/IE OP. This designation is not relevant for SIMOTION D.

Additional references

Detailed information on the states of the status LEDs can be found in the *SIMOTION D4x5-2* Commissioning and Hardware Installation Manual, Section *Diagnostics*.

Interface characteristics

Table 4-5 Ports X150 P1 to P3

Characteristic	Type
Connector type	RJ45 socket connector
Cable type	PROFINET

Characteristic	Type
Maximum cable length	100 m
Minimum send cycle clock	0.25 ms (D455-2 DP/PN: 0.125 ms)
Autocrossing	Yes i.e. both crossed and uncrossed cables can be used
Dust protection filler plugs for sealing unused PROFINET ports	Five filler plugs contained in the D4x5-2 scope of delivery Filler plugs (50 pcs) article number: 6SL3066-4CA00-0AA0

Interface assignment

Table 4-6 Assignment of the ports X150 P1 to P3

Representation	Pin	Name	Description
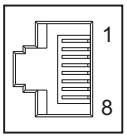	1	TXP	Send data +
	2	TXN	Send data -
	3	RXP	Receive data +
	4	-	Reserved, do not use
	5	-	Reserved, do not use
	6	RXN	Receive data -
	7	-	Reserved, do not use
	8	-	Reserved, do not use

Connectable devices

The following devices can be connected to the PROFINET IO interface:

- PG/PC programming devices (communication with SIMOTION SCOUT / STEP 7)
- SIMATIC HMI devices
- SIMATIC controllers with PROFINET interface
- Distributed I/O
- Drive units with PROFINET IO interface (standard devices)

The SIMOTION D4x5-2 DP/PN then assumes the role of a PROFINET IO controller and can offer the following functions:

- PROFINET IO controller, I-device (also controller and device simultaneously)
- Supports real-time classes of PROFINET IO:
  - RT (real-time)
  - IRT (isochronous real-time)

The following functions are also supported by Industrial Ethernet:

- Communication between SIMOTION and SIMATIC NET OPC.
  The "SIMATIC NET SOFTNET S7 (S7 OPC server)" software must be installed on the PG/PC for this function.
- Communication with other devices over TCP/IP or UDP communication

- IT communication (e.g. via SIMOTION IT OPC XML-DA)
- Communication based on OPC UA (Unified Architecture)

For further information on the software packages, see Catalog *SIMOTION PM 21*

Note

A list of the modules released with SIMOTION is available at (https://support.industry.siemens.com/cs/ww/en/view/11886029).

The list is updated regularly and contains information on the use of these modules.

Take note of the documentation on the individual modules or devices!

Second PROFINET interface

The Ethernet Communication Board (CBE30-2) provides as option a second PROFINET interface for the D4x5-2 DP/PN Control Units.

The CBE30-2 cannot be used in SIMOTION D4x5 2 DP Control Units.

For details, see Section CBE30-2 Ethernet communication board (Page 123).

4.4 Digital I/Os

4.4.1 Properties

Interface characteristics

The digital I/Os on the X122, X132 and X142 connectors are for the connection of sensors and actuators.

Table 4-7 Wiring of X122, X132 and X142

Features		Type
Connector type		14-way spring-loaded terminal
Number of cables that can be connected		1
Connectable cable types and conductor cross-sections		
	Rigid	0.2 mm² ... 1.5 mm²
	Flexible	0.2 mm² ... 1.5 mm²
	Flexible, with wire-end ferrule without plastic sleeve	0.25 mm² ... 1.5 mm²
	Flexible, with wire-end ferrule with plastic sleeve	0.25 mm² ... 0.75 mm²
	AWG / kcmil	24 ... 16

Features	Type
Stripped length	10 mm
Tool	Screwdriver 0.4 x 2.0 mm
Max. cable length	30 m
Max. current carrying capacity (ground)	6 A

Position of connectors

The following figure shows the position of the interface connectors on the D4x5-2 and the distribution of the various digital I/Os.

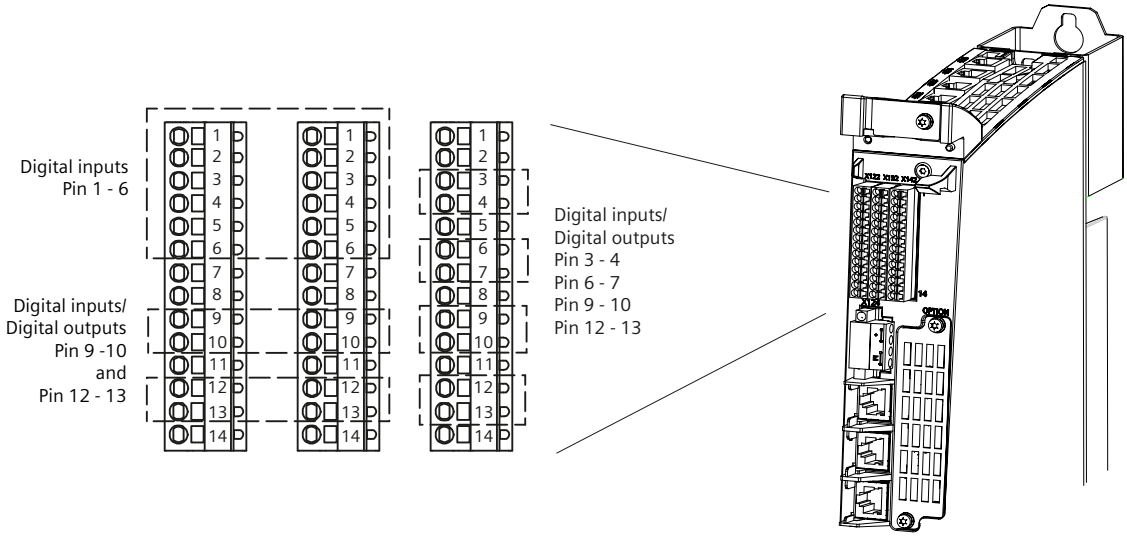

Figure 4-3 Position of the X122, X132 and X142 digital interfaces (example of SIMOTION D445-2 DP/PN)

Connection and circuit diagram for SIMOTION D4x5-2

The following figure shows the wiring and block diagram of the digital inputs as well as the digital input/outputs using the example of a SIMOTION D4x5-2 DP/PN.

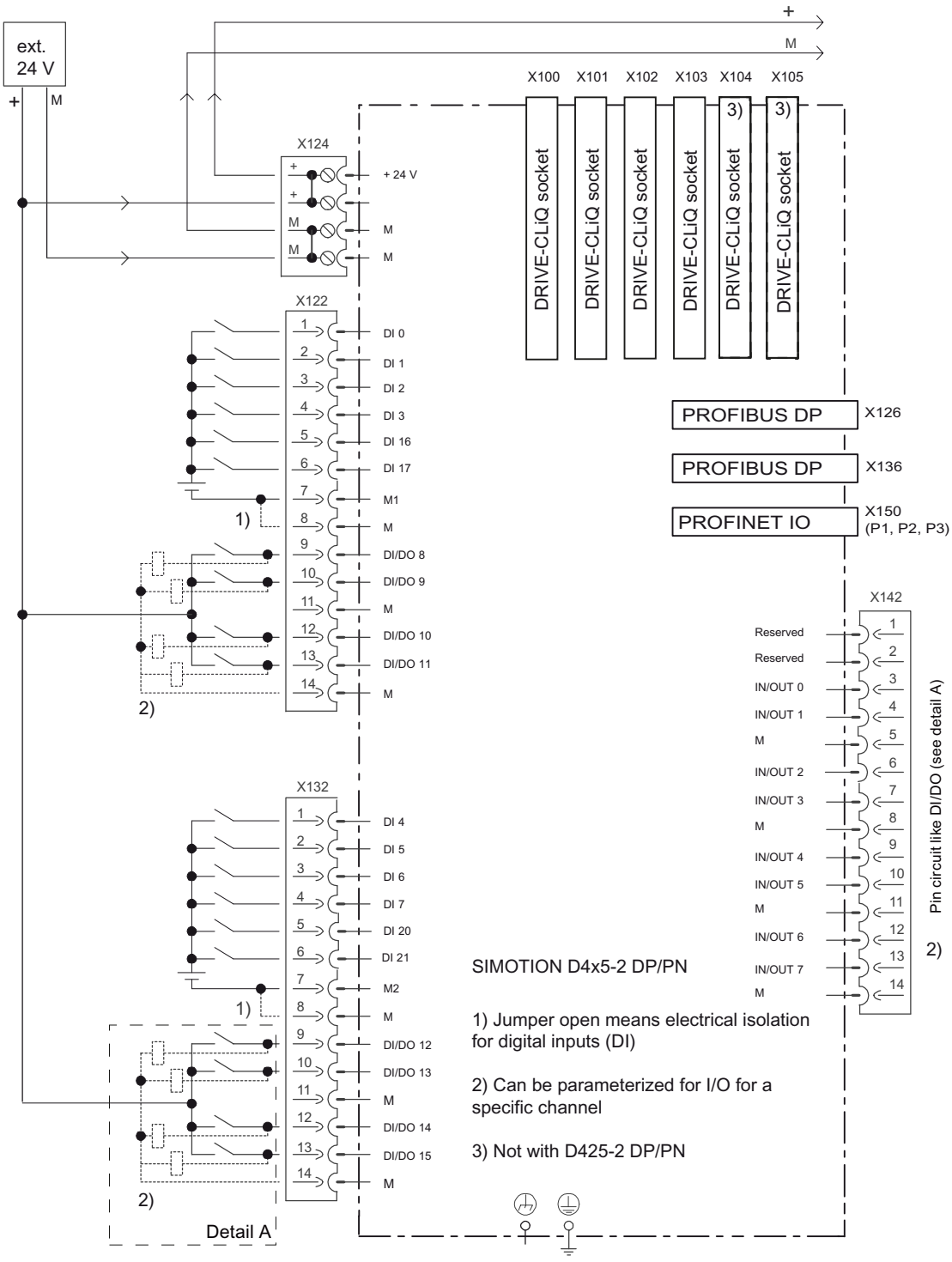

Figure 4-4 Connection and circuit diagram of the digital I/Os

Interface assignment of X122, X132 and X142

Table 4-8 Digital inputs/outputs X122

Pin	Designation [1]	Signal type [2]	Notes
1	DI 0	I	Digital input 0
2	DI 1	I	Digital input 1
3	DI 2	I	Digital input 2
4	DI 3	I	Digital input 3
5	DI 16	I	Digital input 16
6	DI 17	I	Digital input 17
7	M1	GND	Ground for DI 0 – DI 3, DI 16, DI 17 (electrically isolated relative to M)
8	M	GND	Ground
9	DI/DO 8	B	Digital input/output 8 (can also be used as input for measuring input or as input for the external zero mark)
10	DI/DO 9	B	Digital input/output 9 (can also be used as input for measuring input or as input for the external zero mark)
11	M	GND	Ground
12	DI/DO10	B	Digital input/output 10 (can also be used as input for measuring input or as input for the external zero mark)
13	DI/DO 11	B	Digital input/output 11 (can also be used as input for measuring input or as input for the external zero mark)
14	M	GND	Ground

[1] DI: Digital input; DI/DO: Bidirectional digital input/output; M: Electronics ground; M1: Ground reference

[2] B = Bidirectional; I = Input; GND = Reference potential (ground)

Table 4-9 Digital inputs/outputs X132

Pin	Designation [1]	Signal type [2]	Notes
1	DI 4	I	Digital input 4
2	DI5	I	Digital input 5
3	DI 6	I	Digital input 6
4	DI 7	I	Digital input 7
5	DI 20	I	Digital input 20
6	DI 21	I	Digital input 21
7	M2	GND	Ground for DI 4 – DI 7, DI 20, DI 21 (electrically isolated relative to M)
8	M	GND	Ground
9	DI/DO 12	B	Digital input/output 12 (can also be used as input for measuring input or as input for the external zero mark)
10	DI/DO 13	B	Digital input/output 13 (can also be used as input for measuring input or as input for the external zero mark)
11	M	GND	Ground

Pin	Designation [1]	Signal type [2]	Notes
12	DI/DO 14	B	Digital input/output 14 (can also be used as input for measuring input or as input for the external zero mark)
13	DI/DO 15	B	Digital input/output 15 (can also be used as input for measuring input or as input for the external zero mark)
14	M	GND	Ground

[1] DI: Digital input; DI/DO: Bidirectional digital input/output; M: Electronics ground; M2: Ground reference

[2] B = Bidirectional; I = Input; GND = Reference potential (ground)

Note

An open input is interpreted as "low".
To enable the digital inputs to work, terminal M1 or M2 must be connected. The following alternatives are available:

- Connect the carried digital input reference ground to M1 or M2.
- Insert a bridge between terminals M and M1 (or between M and M2).
  This removes the electrical isolation for these digital inputs.

Table 4-10 Digital inputs/outputs X142

Pin	Designation [1]	Signal type [2]	Notes
1	---	---	Reserved, do not use
2	---	---	Reserved, do not use
3	IN/OUT 0	B	Digital input/output 0 (can be used as input of a measuring input or output of an output cam)
4	IN/OUT 1	B	Digital input/output 1 (can be used as input of a measuring input or output of an output cam)
5	M	GND	Ground
6	IN/OUT 2	B	Digital input/output 2 (can be used as input of a measuring input or output of an output cam)
7	IN/OUT 3	B	Digital input/output 3 (can be used as input of a measuring input or output of an output cam)
8	M	GND	Ground
9	IN/OUT 4	B	Digital input/output 4 (can be used as input of a measuring input or output of an output cam)
10	IN/OUT 5	B	Digital input/output 5 (can be used as input of a measuring input or output of an output cam)
11	M	GND	Ground
12	IN/OUT 6	B	Digital input/output 6 (can be used as input of a measuring input or output of an output cam)
13	IN/OUT 7	B	Digital input/output 7 (can be used as input of a measuring input or output of an output cam)
14	M	GND	Ground

[1] IN/OUT: Bidirectional digital input/output; M: Electronic ground

[2] B = Bidirectional; GND = Reference potential (ground)

4.4.2 Using the digital inputs/outputs

Connecting sensors and actuators

Digital I/Os can be used to connect various sensors and actuators to the three 14-pin X122, X132 and X142 front connectors.

The following types of digital I/Os are available:

- Digital inputs (DI)
- Bidirectional digital I/Os (DI/DO, IN/OUT)

Bidirectional digital I/Os can be configured individually as digital inputs or outputs.

Assignment of the I/Os to functions can be parameterized as required. Special functions (e.g. input of measuring input and output for output cam) can also be assigned to the I/Os.

The digital I/Os on the X122 and X132 front connectors can be used by either SIMOTION or SINAMICS (e.g. as enable signal for a drive).
The digital I/Os on the X142 front connector are permanently allocated to SIMOTION.

Table 4-11 Use of the digital I/Os

	DI 0-7, DI 17, DI 18, DI 20, DI 21 (X122, X132)	**DI/DO 8-15 (X122, X132)**	**IN/OUT 0-7 (X142)**
Galvanic isolation	Electrically isolated (ground reference M1 or M2)	Non-isolated (ground reference M)	Non-isolated (ground reference M)
Use as:			
• Freely addressable I/Os for SIMOTION	Yes	Yes	Yes
• I/Os that are assigned to the drive	Yes	Yes	No
• Measuring inputs	No	Yes (global and local measuring inputs)	Yes (global measuring inputs)
• Inputs for the external zero mark	No	Yes	No
• Cam outputs	No	No	Yes
Configuration:			
Assignment	Can be configured channel-by-channel on the drive	Can be configured channel-by-channel on the drive	Can be configured channel-by-channel in HW Config

Note

For optimal noise immunity of the digital inputs, the use of shielded cables is necessary if they are to be used as

- Inputs of measuring inputs or
- Inputs for the external zero mark

Inductive loads

If the digital inputs are used together with inductive loads, it must be ensured that the permissible voltage range of -30 V to +30 V for digital inputs is not exceeded by the switching overvoltage of inductive loads. This is preferably achieved by using auxiliary contacts on the contactor/relay for the digital inputs.
If no auxiliary contacts are available, overvoltage protection must be used. Protective circuits with a freewheeling diode or a diode combination with a Z-diode are possible. RC elements and varistors are not suitable due to the remaining residual voltages.

Additional references

For information on configuring the digital I/Os as freely addressable I/Os, inputs of measuring inputs or outputs of output cams, see the *SIMOTION D4x5-2* Commissioning and Hardware Installation Manual.

For information on the configuration and function of the measuring input, output cam, and cam track technology objects, refer to the *SIMOTION Output Cams and Measuring Inputs* Function Manual.

4.5 Power supply

This interface is provided for connection of the external power supply.

Note

When using external power supplies (e.g. SITOP), the ground potential must be connected with the protective ground terminal (PELV).

Note

Ground potential and housing (PE) are connected internally with low impedance.

Note

The 24 V DC cable must be approved for temperatures up to at least 75 °C.
The maximum permissible cable length is 10 m.

Features of the interface

Table 4-12 Interface X124

Features		Type
Connector type		4-way screw-type terminal
Number of cables that can be connected		1
Connectable cable types and conductor cross-sections		
	Rigid	0.2 mm² ... 2.5 mm²
	Flexible	0.2 mm² ... 2.5 mm²
	Flexible, with wire-end ferrule without plastic sleeve	0.2 mm² ... 2.5 mm²
	Flexible, with wire-end ferrule with plastic sleeve	0.2 mm² ... 1.5 mm²
	AWG / kcmil	22 ... 12
Stripped length		6 ... 7 mm
Tool		Screwdriver 0.5 x 3 mm (M2.5)
Tightening torque		0.4 to 0.5 Nm (3.5 ... 4.4 lbf in)
Max. current carrying capacity, incl. loop-through		20 A (15 A per UL/CSA)
Max. cable length		10 m

Interface assignments

Table 4-13 Power supply X124

Pin	Signal name	Meaning
1	+	Power supply 24 V
2	+	Power supply 24 V
3	G	Ground
4	G	Ground

Note

The 24 V is looped through via the 24 V connector. In this case, pin 1 is jumpered with pin 2, and pin 3 is jumpered with pin 4 in the connector. The maximum current can be limited through the current carrying capacity of the cable. The current carrying capacity of the cable depends, for example, on the type of cable installation (cable duct, laying on a cable rack, etc.).

Position of power supply interface

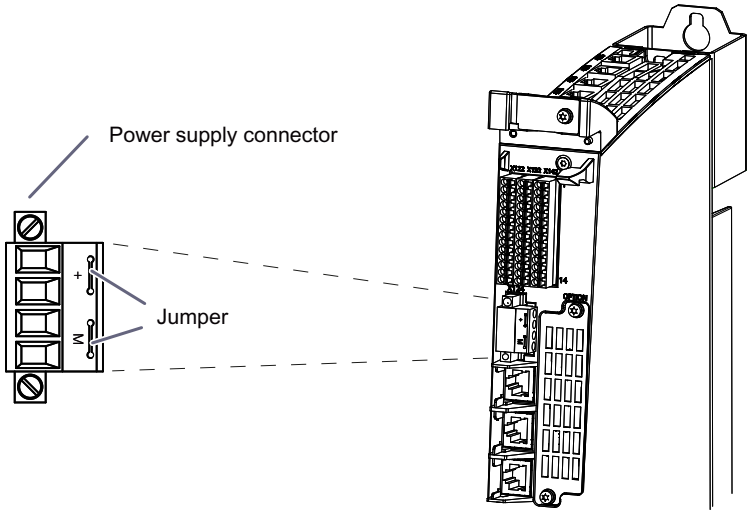

Figure 4-5 Position of the power supply interface (example of SIMOTION D445-2 DP/PN)

Note

The power supply terminal strip must be screwed on tightly using a flat-bladed screwdriver.

Disconnecting 24 V plug-in connections during operation

Observe the following safety instructions when using SIMOTION D4x5-2/CX32-2:

⚠ WARNING

Personal injury and damage to property may occur

Personal injury and damage to property may occur if you disconnect 24 V plug-in connections during operation.
Disconnecting 24 V plug-in connections is only permitted in a de-energized state.

4.6 Ethernet interfaces

Interfaces for connection to Industrial Ethernet

Industrial Ethernet is a communications network with a transmission rate of 10/100/1000 Mbit/s.
SIMOTION D4x5-2 offers the following functions via Ethernet interfaces:

- Communication with STEP 7 and SIMOTION SCOUT
- Communication between SIMOTION and SIMATIC NET OPC
  The following software must be installed on the PG/PC for this function:
  "SIMATIC NET SOFTNET-S7 (S7-OPC server)"

- Connection of HMI systems
- Communication with other devices over TCP/IP or UDP communication
- IT communication (e.g. via SIMOTION IT OPC XML-DA)
- Communication based on OPC UA (Unified Architecture)

For further information on the software packages, see Catalog *SIMOTION PM 21*

Position of connectors for SIMOTION D4x5-2 DP

The following figure shows the position of the Ethernet interfaces on the D4x5-2 DP and their displays.

Display	Status		Meaning
LINK	Orange		Transfer rate 1000 Mbps
	Green		Transfer rate 10 or 100 Mbps
	Off		No or faulty connection
ACT	Yellow		Data exchange
	Off		No data exchange

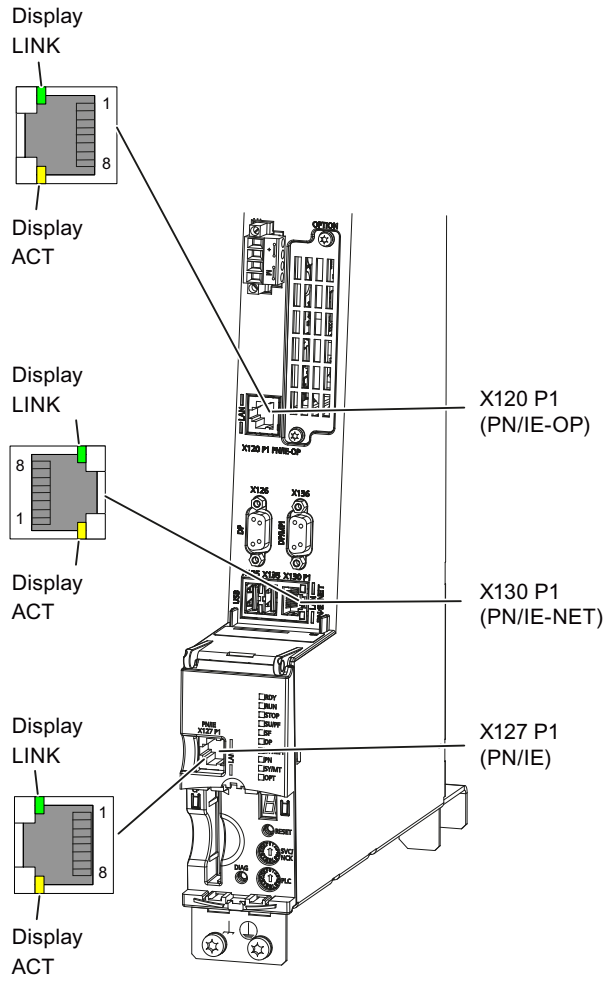

Figure 4-6 The position of the Ethernet interfaces (example of SIMOTION D435-2 DP)

Note

As of V4.3, the three Ethernet interfaces support the PROFINET basic services - they therefore have the designation PN/IE-NET, PN/IE-OP or PN/IE.

These PROFINET basic services (e.g. DCP, LLDP, SNMP) provide uniform functions for the address assignment and diagnostics, but do not provide PROFINET IO communication for the connection of drives, I/O modules, etc.

Position of connectors for SIMOTION D4x5-2 DP/PN

The following figure shows the position of the Ethernet interfaces on the D4x5-2 DP/PN and their displays.

Display	Status		Meaning
LINK	Green		Transfer rate 10 or 100 Mbps
	Off		No or faulty connection
ACT	Yellow		Data exchange
	Off		No data exchange

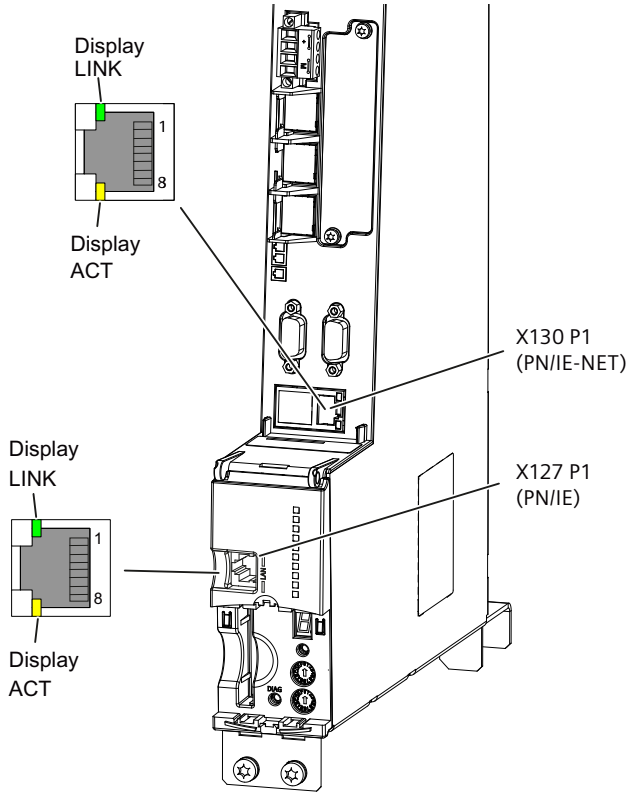

Figure 4-7 The position of the Ethernet interfaces and their displays (example of SIMOTION D445-2 DP/PN)

Note

As of V4.3, the two Ethernet interfaces support the PROFINET basic services - they therefore have the designation PN/IE-NET or PN/IE.

These PROFINET basic services (e.g. DCP, LLDP, SNMP) provide uniform functions for the address assignment and diagnostics, but do not provide PROFINET IO communication for the connection of drives, I/O modules, etc.

Additional references

You will find detailed information on the states of the status LEDs in the *SIMOTION D4x5-2* Commissioning and Hardware Installation Manual, Chapter *Diagnostics*.

Interface characteristics

Table 4-14 X127 P1 and X130 P1 (X120 P1 only for SIMOTION D4x5-2 DP)

Characteristic	Type
Connector type	RJ45 socket connector
Cable type	Industrial Ethernet cable • 4- and 8-wire cables can be used for 10/100 Mbit/s • 8-wire cables must be used for 1000 Mbit/s
Max. cable length	100 m
Autocrossing	Yes
Dust protection filler plugs for sealing unused Ethernet ports	Five filler plugs contained in the D4x5-2 scope of delivery Filler plugs (50 pcs) article number: 6SL3 066-4CA00-0AA0
Miscellaneous	X127 P1, X120 P1 and X130 P1 are full-duplex 10/100/1000 Mbit/s Ethernet ports

Pin assignment

Table 4-15 X127 P1 and X130 P1 Ethernet interfaces (X120 P1 only for SIMOTION D4x5-2 DP)

Representation	Pin	Assignment in 10/100 Mbit mode			Assignment in 1 Gbit mode		
Signal name [1]	Signal type	Meaning	Signal name [1]	Signal type	Meaning		
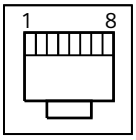	1	TXP	O	Ethernet send differential signal	DA+	B	Bidirectional pair A+
	2	TXN	O	Ethernet send differential signal	DA-	B	Bidirectional pair A-
	3	RXP	I	Ethernet receive differential signal	DB+	B	Bidirectional pair B+
	4	- - -	- - -	Reserved, do not use	DC+	B	Bidirectional pair C+
	5	- - -	- - -	Reserved, do not use	DC	B	Bidirectional pair C-
	6	RXN	I	Ethernet receive differential signal	DB-	B	Bidirectional pair B-
	7	- - -	- - -	Reserved, do not use	DD+	B	Bidirectional pair D+
	8	- - -	- - -	Reserved, do not use	DD-	B	Bidirectional pair D-
I = Input; O = Output; B = Bidirectional							

[1] Autocrossing functionality (if required, send and receive lines switch over)

Note

The MAC addresses are imprinted on an adhesive label that is located behind the protective cover and can be seen from the front.

4.7 PROFIBUS DP interfaces

Characteristics of the interface

Table 4-16 Interfaces X126 and X136

Characteristics	Version
Connector type	9-pin Sub-D socket
Cable type	PROFIBUS cable
Max. cable length	100 m at 12 Mbit/s

Position of connectors

The following figure shows the mounting position and designation of the connectors on the control unit.

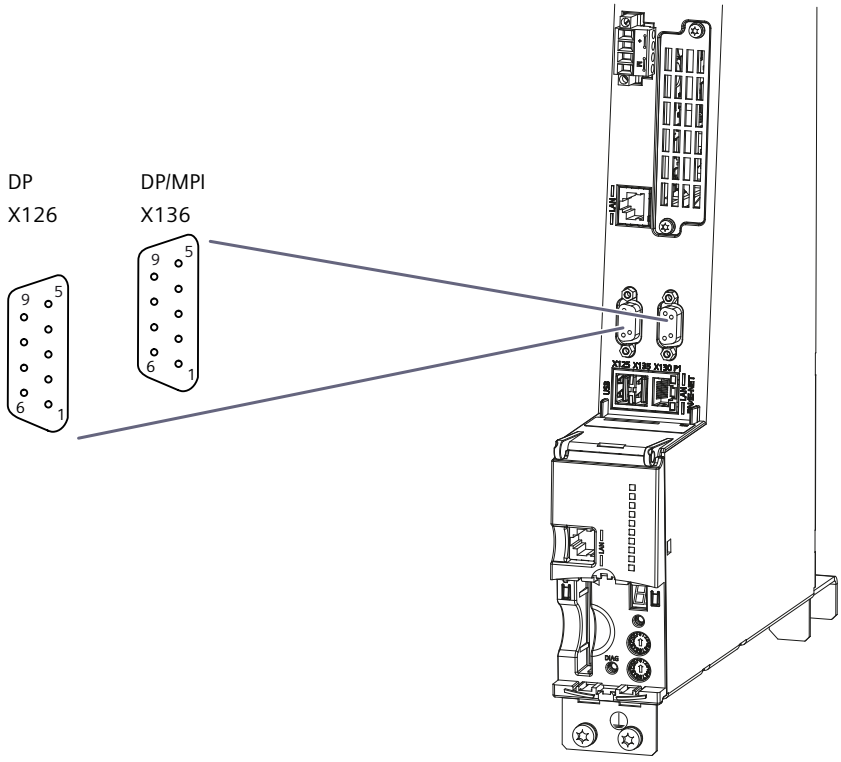

Figure 4-8 The position of the PROFIBUS X126 and X136 interfaces (example of SIMOTION D4x5-2 DP)

Note

For the X126 interface, an adapter connector is available for raising the PROFIBUS connector to make more cabling space. This connector is required in certain wiring scenarios.

For further details, see

- Section Available spare parts and accessories (Page 151)
- *SIMOTION D4x5-2* Commissioning and Hardware Installation Manual, Section Connecting PROFIBUS DP

Interface assignment for X126

Table 4-17 PROFIBUS DP interface X126

Pin	Signal name	Signal type	Meaning
1	--	--	Reserved, do not use
2	M	VO	Ground to P24_SERV
3	1RS_DP	B	RS-485 differential signal
4	1RTS_DP	O	Request to send
5	1M	VO	Ground to 1P5
6	1P5	VO	5 V power supply for bus terminal, external, short-circuit proof
7	P24_SERV	VO	24 V for teleservice, short-circuit proof, 150 mA maximum
8	1XRS_DP	B	RS-485 differential signal
9	--	--	Reserved, do not use
The 1P5 voltage is provided exclusively for the bus terminal. No OLPs are permitted.			
Signal type: VO = Voltage output (power supply); O = Output; B = Bidirectional			

Interface assignment for X136

Table 4-18 PROFIBUS DP interface X136

Pin	Signal name	Signal type	Meaning
1	--	--	Reserved, do not use
2	M	VO	Ground to P24_SERV
3	2RS_DP	B	RS-485 differential signal
4	2RTS_DP	O	Request to send
5	2M	VO	Ground to 1P5
6	2P5	VO	5 V power supply for bus terminal, external, short-circuit proof
7	P24_SERV	VO	24 V for teleservice, short-circuit proof, 150 mA maximum
8	2XRS_DP	B	RS-485 differential signal
9	--	--	Reserved, do not use

Pin	Signal name	Signal type	Meaning
Voltages 1P5 and 2P5 are exclusively for supplying the bus terminator. No OLPs are permitted.			
Signal type: VO = Voltage output (power supply); O = Output; B = Bidirectional			

Connectable devices

The following devices can be connected to the PROFIBUS DP interfaces:

- PG/PC
- SIMATIC HMI devices
- SIMATIC controllers with PROFIBUS DP interface
- Distributed I/O
- Teleservice adapter
- Drive units with PROFIBUS DP interface (standard slaves)

Note

For remote diagnosis, a teleservice adapter can be connected to the PROFIBUS X126 or X136 interface. A teleservice adapter can only be connected to one of the two interfaces.

The power supply for the teleservice adapter (terminals 2 and 7) can accept current loads as high as 150 mA and is sustained short-circuit proof.

4.8 Slot for CompactFlash card/SD card

Characteristics

This interface can only be used to insert a special SIMOTION CompactFlash card (CF card) or SD card.

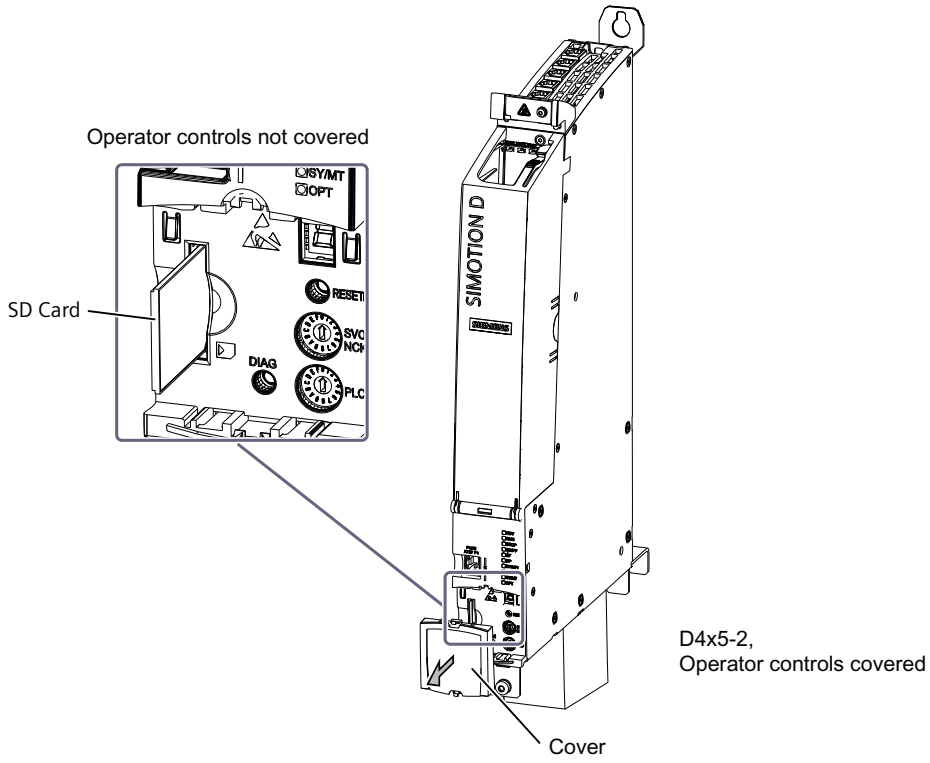

Figure 4-9 Slot for the SD card

For detailed information on the SIMOTION CF card or SD card, refer to the corresponding references in the CompactFlash card (Page 46) and SD card (Page 50) sections.

Note

CF card

The image for the CF card slot deviates from the image for the SD card slot.

4.9 Measuring sockets

Application

The measuring sockets X141 (T0, T1 and T2) are on the lower side of the module and are used to output analog signals. Any interconnectable signal can be output via SINAMICS on every measuring socket on the control unit.

Interface assignment

Table 4-19 Measuring sockets T0, T1, T2

	Socket	Function	Technical specifications
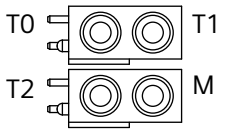	T0	Measuring socket 0	Voltage: 0 V to 5 V Resolution: 8 bits Load current: Max. 3 mA Continuous short-circuit-proof Reference potential is G terminal
	T1	Measuring socket 1	
	T2	Measuring socket 2	
	M	Ground	
The measuring sockets are suited for multiple-spring wire connectors with a diameter of 2 mm.			

Note

The measuring sockets support commissioning and diagnostic functions. Connection for normal operation is not permitted.

Measuring socket position

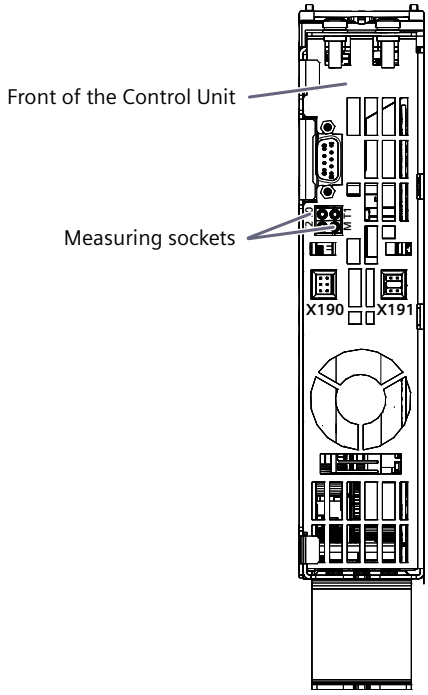

Figure 4-10 Measuring socket position

4.10 USB interfaces

The USB interfaces are used for upgrading the SIMOTION D4x5-2 via a USB stick.

Table 4-20 Interfaces X125 and X135

Characteristics	Versions
Connector type	Double USB socket – type A
Version	USB 2.0
Power supply	5 V (short-circuit proof)
Current carrying capacity	0.5 A per channel

The USB interfaces are located on the front of the SIMOTION D4x5-2.

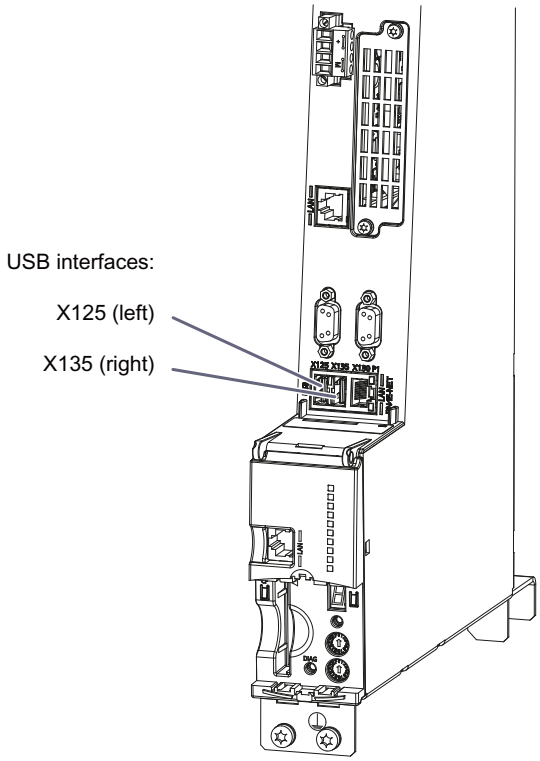

Figure 4-11 The position of the USB X125 and X135 interfaces (example of SIMOTION D4x5-2 DP)

Technical data of the D4x5-2

5

5.1 Shipping and storage conditions

Transportation and storage conditions

The following conditions apply to modules that are shipped and stored in the original packaging.

Table 5-1 Transportation conditions

Type of condition	Permissible range/class	
	Transport	**Long-term storage**
Climate class	2K4 according to EN 60721-3-2:1997	1K4 according to EN 60721-3-1:1997
Temperature	From -40° C to +70° C	From -25° C to +55° C
Relative humidity	From 5 to 95%	From 10% to 100%
Height	Max. 4000 m above sea level, For SINAMICS S120 drive components, see SINAMICS Manuals.	
Atmospheric pressure	• > 620 hPa • < 1060 hPa The specified values apply to a transportation altitude of up to 4,000 m	• > 620 hPa • < 1060 hPa The specified values apply to a storage altitude of up to 4,000 m
Biological environmental conditions	Class 2B1 according to EN 60721-3-2:1997	Class 1B1 acc. to EN 60721-3-1:1997
Chemically active environmental conditions	Class 2C2 according to EN 60721-3-2:1997	Class 1C2 according to EN 60721-3-1:1997
Classification of the mechanical environment	3M1	

Shipping backup batteries

No battery is included/required in the fan module for SIMOTION D4x5-2 (-0AA2).

Backup batteries may only be shipped in the original packaging. No special authorization is required to ship backup batteries. The lithium content of the backup battery is approximately 300 mg.

Note

The backup battery is classified as a hazardous substance, Class 9 in accordance with the relevant air-freight transportation regulations.

Notes on handling backup batteries can be found in the SIMOTION D4x5-2 Commissioning and Hardware Installation Manual in the section "Replacing the battery in the fan/battery module".

Storage of backup batteries

Always store backup batteries in a cool and dry place. The batteries have a maximum shelf life of 10 years.

Note

If you have a spare parts inventory, you must not store a SIMOTION D4x5-2 with the fan/battery module mounted. Only connect the fan/battery module if the fan or battery backup voltage is required.

5.2 Ambient conditions

Protect the device from environmental effects

SIMOTION D4x5-2 is designed for use in stationary, weather-protected locations.
Protect the device against the following environmental factors:

- Direct sunshine and heat sources
- Mechanical vibration and shock
- Dust
- Humidity
- Strong magnetic fields

Use prohibition

SIMOTION D4x5-2 must not be used in the following applications without additional measures:

- Locations with a high percentage of ionizing radiation
- Locations with extreme operating conditions, e.g.
  - Dust accumulation
  - Corrosive vapors or gases
- Installations requiring special monitoring such as:
  - Elevator installations
  - Electrical installations in particularly hazardous rooms

An additional measure for using SIMOTION D4x5-2 can, for example, be installation in cabinets.

Note

The components must be protected against conductive contamination, e.g. by installing them in a control cabinet with degree of protection IP54 according to IEC 60529 or NEMA 12.

If conductive contamination can be excluded at the installation site, a lower degree of cabinet protection may be permitted.

See Industrial security.

Ambient conditions for operation

SIMOTION D4x5-2 can be used under the following ambient conditions:

Ambient conditions	Fields of application	Remarks
Climatic ambient conditions		
Climate class	3K3	According to EN 60721-3:1995 Ambient conditions better than 3K3
Permissible ambient temperature: During operation when installed vertically	From 0° to 55° C, to 2000 m above sea level	The max. ambient temperature decreases as of an elevation of 2000 m by 7° C per 1000 m increase in elevation. The maximum supply air temperature for all modules is 55° C. The fan/battery module is always required for SIMOTION D4x5-2 Control Units.
Relative humidity	From 5 to 95 %	For SIMOTION D4x5-2
	From 0 to 100 %	For SIPLUS D4x5-2
Condensation, formation of ice, drip, spray, and splash water	Not permissible	For SIMOTION D4x5-2
	Condensation/frost permitted (no commissioning under condensation)	For SIPLUS D4x5-2
Conformal coating	No	For SIMOTION D4x5-2
	Yes	For SIPLUS D4x5-2
Installation altitude	Max. 4000 m above sea level	For SINAMICS S120 drive components, see SINAMICS Manuals.
Atmospheric pressure	620 hPa ... 1060 hPa	Corresponding elevation of 4000 m - 0 m above sea level
Biological, chemical and mechanical influences, pollutants		

Biological ambient conditions:	For SIMOTION D4x5-2 Class 3B1 according to EN 60721-3-3:1995 Mold, mold growth, slime, rodents, termites and other animal vermin are not permissible
	For SIPLUS D4x5-2 Resistant to biologically active substances, conformity according to EN 60721-3-3. Class 3B2, mold and fungal spores (except fauna) For operation in a harmful gas atmosphere, the plug covers included in delivery must be left on the unused interfaces!
Chemically active environmental conditions	For SIMOTION D4x5-2 Class 3C1 according to EN 60721-3-3:1995
	For SIPLUS D4x5-2 Resistant to chemically active substances, conformity according to EN 60721-3-3. Class 3C4 incl. salt spray according to EN 60068-2-52 (severity 3); the plug covers included in delivery must be left on the unused interfaces!
Mechanically active environmental conditions	Class 3S1 according to EN 60721-3-3:1995, conductive dust not permitted
Vibratory load - D4x5-2 - CX32-2 - CBE30-2 - S120 (without SME/DME)	Vibratory load during operation according to EN 60721-3-3: Class 3M1 Test values according to EN 60068-2-6 (sinusoidal) • 10 ... 57 Hz: 0.075 mm deflection amplitude • 57 ... 150 Hz: 1 g acceleration amplitude • 10 frequency cycles per axis
Shock load - D4x5-2 - CX32-2 - CBE30-2 - S120 (without SME/DME)	Shock load during operation according to EN 60721-3-3: Class 3M1 Test values according to EN 60068-2-27 (half-sinusoidal) • 5 g peak acceleration, 30 ms duration • 3 shocks in all three axes in both directions
Overvoltage category	OVC2
Service life	10 years

SIMOTION D435-2 DP/PN and D455-2 DP/PN are also available as SIPLUS version for use under harsh environmental conditions, e.g. in toxic atmospheres. As BasedOn products, the SIPLUS versions have the same functionality as the standard modules and are configured in the same way.

EMF assessments for 24 V components

The 24 V components, e.g. control systems (NCU, MCU, PPU), PCUs/IPCs, operator panels, handheld terminals and machine control panels do not generate any appreciable electromagnetic fields.

No minimum clearance has to be maintained to the 24 V components.

Permitted mounting positions

Following mounting position is permitted:

- Vertical installation

Other data

Table 5-2 Other data

Data	
Degree of protection according to EN 60529 (IEC 60529)	IP 20
Pollution degree	2 according to EN 60664-1:2008

5.3 Dimensions and weights

Dimensions and weights

Table 5-3 Dimensions and weight of a SIMOTION D4x5-2

Parameter	D425-2 DP D425-2 DP/PN D435-2 DP D435-2 DP/PN	D445-2 DP/PN D455-2 DP/PN	D4x5-2 (-0AA2)
Dimensions W x H x D [mm]			
• Without fastening using spacers, without fan/battery module	50 x 380 x 230	50 x 380 x 230	50 x 380 x 230
• With fastening using spacers, without fan/battery module	50 x 380 x 270	50 x 380 x 270	50 x 380 x 270
Weight [g] - Without packaging - With packaging	Approx. 3.7 kg Approx. 4.5 kg	Approx. 4.3 kg Approx. 5.0 kg	Approx. 3.7 kg Approx. 4.5 kg

Note

The spacers can be removed for D425-2 and D435-2.

D425-2, D435-2 and D4x5-2 (-0AA2) do not have cooling fins.

The presence of cooling fins for D445-2 DP/PN and D455-2 DP/PN (-0AA0) means the spacers can be removed only for the "external cooling" installation type. In this installation method, the cooling fins are inserted through a cutout in the rear cabinet panel.

For further details, see the *SIMOTION D4x5-2* Commissioning and Hardware Installation Manual.

5.4 Power supply

External 24 V power supply

The Control Unit is supplied by an external 24 V power supply (e.g. SITOP).

The tolerance range for the input voltage of the SIMOTION D4x5-2 is between 20.4 and 28.8 VDC.

Table 5-4 Power loss

	D425-2 DP **D435-2 DP**	**D425-2 DP/PN** **D435-2 DP/PN**	**D445-2 DP/PN** **D455-2 DP/PN**	**D4x5-2 (-0AA2)**
Power supply • Rated value • Permissible range	Safety extra-low voltage DVC A (PELV) 24 VDC (20.4 ... 28.8 V)			
Current consumption, typically [1]	0.7 A	1.0 A	1.9 A	0.95 A
Starting current, typically [1]	5 A	5 A	5 A	4.8 A
Power loss, typically [1]	17 W	24 W	46 W	23 W

[1] With no load on inputs/outputs, no 24 V supply via DRIVE-CLiQ and PROFIBUS interfaces

Table 5-5 Input voltage specification

Input voltage	**D4x5-2**
Minimum input voltage	20.4 V
Nominal input voltage	24 V
Maximum input voltage	28.8 V

Table 5-6 Power loss - Typical current consumption

	Typical current consumption [1]			
Device type	**D425-2 DP** **D435-2 DP**	**D425-2 DP/PN** **D435-2 DP/PN**	**D445-2 DP/PN** **D455-2 DP/PN**	**D4x5-2 (-0AA2)**
Max. input voltage 20.4 V	0.8 A	1.2 A	2.24 A	1.1 A
Nominal Input voltage 24 V	0.7 A	1.0 A	1.9 A	0.95 A
Max. input voltage 28.8 V	0.6 A	0.8 A	1.58 A	0.85 A

[1] With no load on inputs/outputs and no 24 V supply via DRIVE-CLiQ or PROFIBUS interface

Table 5-7 Power loss - Maximum current consumption

	Maximum current consumption					
Device type	**D425-2 DP**	**D425-2 DP/PN**	**D435-2 DP**	**D435-2 DP/PN**	**D445-2 DP/PN D455-2 DP/PN**	**D4x5-2 (-0AA 2)**
Max. input voltage 20.4 V	12.8 A	13.6 A	13.9 A	14.6 A	18.35 A	12.7 A
Nominal Input voltage 24 V	10.9 A	11.5 A	11.8 A	12.4 A	15.6 A	12.5 A
Max. input voltage 28.8 V	9.1 A	9.6 A	9.8 A	10.3 A	13 A	12.4 A

Note

If the D4x5-2 detects undervoltage, the module performs a RESET. If all LEDs are off, either there is no power supply or the voltage level is too low.

When the voltage level is in the permissible range again, the D4x5-2 restarts.

Undervoltages are detected when:

- The voltage level of the 24-V supply falls below the minimum permissible input voltage of the D4x5-2
- A temporary voltage dip (> 3 ms) results in the supply falling below the minimum permissible input voltage on the D4x5-2.

Additional references

Recommended power supply units and tables for calculating the current consumption for the assembly with SINAMICS S120 modules can be found in the "Control cabinet installation and EMC booksize" chapter in the *SINAMICS S120 Booksize Power Units* Manual.

5.5 Interfaces and performance features

Memory for system data

Table 5-8 Memory for system data and its memory capacity

Data	Memory capacity D425-2	Memory capacity D435-2	Memory capacity D445-2 DP/PN	Memory capacity D455-2 DP/PN
Diagnostics buffer (non-volatile)	200 messages (SI-MOTION) 200 messages (SI-NAMICS Integrated)	200 messages (SI-MOTION) 200 messages (SI-NAMICS Integrated)	200 messages (SI-MOTION) 200 messages (SI-NAMICS Integrated)	200 messages (SI-MOTION) 200 messages (SI-NAMICS Integrated)
RAM (working memory) [1]	78 MB (as of V5.4 SP3) 76 MB (as of V5.3 SP1) 64 MB (V4.4 - V5.2 SP1) 48 MB (up to V4.3 SP1)	109 MB (as of V5.4 SP3) 105 MB (as of V5.3 SP1) 86 MB (V4.4 - V5.2 SP1) 64 MB (up to V4.3 SP1)	196 MB (as of V5.4 SP3) 190 MB (as of V5.3 SP1) 160 MB (V4.4 - V5.2 SP1) 128 MB (up to V4.3 SP1)	388 MB (as of V5.4 SP3) 380 MB (as of V5.3 SP1) 320 MB (V4.4 - V5.2 SP1) 256 MB (up to V4.3 SP1)
RAM disk (load memory)	38 MB (as of V5.3 SP1) 31 MB (up to V5.2 SP1)	50 MB (as of V5.3 SP1) 41 MB (up to V5.2 SP1)	68 MB (as of V5.3 SP1) 56 MB (V4.3 SP1 - V5.2 SP1) 50 MB (V4.2 SP1)	90 MB (as of V5.3 SP1) 76 MB (V4.3 SP1 - V5.2 SP1) 70 MB (V4.2 SP1)
Retentive memory	364 KB	364 KB	512 KB	512 KB
Persistent memory (user data on CF/SD)	2 GB CF: 1.5 GB 1 GB CF: 300 MB	2 GB CF: 1.5 GB 1 GB CF: 300 MB 8 GB SD card [2]	2 GB CF: 1.5 GB 1 GB CF: 300 MB	2 GB CF: 1.5 GB 1 GB CF: 300 MB 8 GB SD card [2]

[1] A separate 20 MB of working memory is available for Java applications.

[2] For version (-0AA2)

Note

The memory capacities may be increased for the current version after the time of going to press of the documentation. The latest values can be found at Internet (https://support.industry.siemens.com/cs/ww/en/view/18857317)

PLC and motion control performance

Data	D425-2 DP D425-2 DP/PN D435-2 DP	D435-2 DP/PN	D445-2 DP/PN	D455-2 DP/PN
Minimum PROFINET send cycle clock	D425-2 DP/PN: 0.25 ms	0.25 ms	0.25 ms	0.125 ms (as of V4.5) [1] 0.25 ms (to V4.4)
Minimum servo/ interpolator cycle clock (with SINAMICS Integrated / CX32-2)	0.5 ms	0.25 ms (as of V4.5) 0.5 ms (to V4.4)	0.25 ms (as of V4.5) 0.5 ms (to V4.4)	0.25 ms (as of V4.5) 0.5 ms (to V4.4)
Minimum servo/ interpolator cycle clock (with Servo_fast and IPO_fast)	---	0.25 ms	0.25 ms	0.125 ms (as of V4.5) [1] 0.25 ms (to V4.4)

[1] 0.125 ms (only with ET 200SP, SCOUT TIA and Servo_fast/IPO_fast)

You can find detailed information on the cycle clock settings for cycle clocks ≤ 0.25 ms in the *SIMOTION D4x5-2 Commissioning and Hardware Installation Manual*.

Integrated drive control

Table 5-9 Controls for integrated drives

Data	SIMOTION D4x5-2 DP/PN
Max. number of axes for integrated drive control (servo/vector/*V/f*)	6 / 6 / 12 (alternative) Drive control based on SINAMICS S120 CU320-2, firmware version V4.x/V5.x

Communication

Table 5-10 Interfaces

Data	SIMOTION D4x5-2 DP	SIMOTION D4x5-2 DP/PN
DRIVE-CLiQ interfaces	6 (D425-2 DP: 4)	6 (D425-2 DP/PN: 4)
Ethernet interfaces	3	2
PROFIBUS interfaces [1]	2	2
PROFINET interfaces [2]	---	Onboard: 1 interface with 3 ports Optionally: Second interface with 4 ports via CBE30-2

[1] Supports PROFIBUS DP, isochronous, can be configured either as master or slave

[2] Supports PROFINET IO with IRT and RT, can be configured as PROFINET IO controller and/or device

Address space

Table 5-11 Address space

		SIMOTION D4x5-2 DP	SIMOTION D4x5-2 DP/PN
Logical I/O address space		16 KB	16 KB
Physical I/O address space for each interface, one each for inputs and outputs			
	PROFIBUS	1 KB [1]	1 KB [1]
	PROFIBUS Integrated	4 KB [1]	4 KB [1]
	PROFINET		6 KB (as of V4.5) [1][2] 4 KB (to V4.4) [1][2]
Permanent process image for BackgroundTask (I/O variables)		64 bytes	64 bytes
Additional configurable process image for each cyclic task (I/O variables)		Yes	Yes
Address space for each PROFIBUS DP station		244 bytes	244 bytes
Address space for each SINAMICS Integrated/ CX32-2 (PROFIBUS Integrated)		512 bytes	512 bytes
Address space for each PROFINET device		---	1400 bytes
Maximum consistency range			
	Onboard PROFINET interface X150 • For controller-controller direct data exchange • For I-Device	---	 254 bytes 1024 bytes (as of V4.4) 254 bytes (< V4.4)
	CBE30-2 • For controller-controller direct data exchange • For I-Device	---	 254 bytes 254 bytes

[1] When PROFIBUS and PROFINET are used, the total address space applies: All I/O are assigned in the logical I/O address space. The maximum number of I/Os is limited by the number that can be addressed using the logical I/O address space.

[2] A second PROFINET interface for the D4x5-2 DP/PN Control Units is optionally available for the CBE30-2.

Digital inputs

Table 5-12 Digital inputs on SIMOTION D4x5-2

Data	SIMOTION D4x5-2 (-0AA0)	SIMOTION D4x5-2 (-0AA2)
Digital inputs	12	
• Rated value	24 VDC	
• For signal "1"	15 ... 30 V	
• For signal "0" [2]	-3 ... +5 V	
Galvanic isolation	Yes, in groups of 6 [1]	

Data	SIMOTION D4x5-2 (-0AA0)	SIMOTION D4x5-2 (-0AA2)
Current consumption typ. at signal level "1"	9 mA at 24 V	4 mA
Input delay, typ. (hardware)	Signal "0" → "1": 50 µs Signal "1" → "0": 150 µs	Signal "0" → "1": 15 µs Signal "1" → "0": 25 µs

1) Reference potential is terminal G1 or G2

2) The digital inputs are protected against polarity reversal up to -30 V

Digital inputs/outputs (parameterizable)

Table 5-13 Digital inputs/outputs on SIMOTION D4x5-2

Data	SIMOTION D4x5-2 (-0AA0)	SIMOTION D4x5-2 (-0AA2)
Digital inputs/outputs	16 • Max. 16 as measuring input inputs • Max. 8 as output cam outputs	
If used as an input		
• Input voltage, rated value	24 VDC	
• Input voltage, for signal "1"	15 ... 30 V	
• Input voltage, for signal "0" 2)	-3 ... +5 V	
Galvanic isolation	No	
Current consumption typ. at signal level "1"	9 mA at 24 V	4 mA
Input delay, typ. (hardware) 3)	Signal "0" → "1": 5 µs Signal "1" → "0": 50 µs	Signal "0" → "1": 5 µs Signal "1" → "0": 5 µs
Measuring input input, resolution	1 µs	
Measuring input input, reproducibility	5 µs	
If used as an output		
• Rated load voltage, permissible range	24 VDC, 20.4 ... 28.8 V	
• Galvanic isolation	No	
• Current load, max.	0,5 A pilot duty 0,5 A resistive 5 W tungsten	
• Residual current, max.	2 mA	
• Output delay time, typ./max. (hardware) 1)	Signal "0" → "1": 150/400 µs Signal "1" → "0": 75/150 µs	
• Output cam output, resolution terminal X142	1 µs	
• Output cam output, reproducibility terminal X142	10 µs	
Switching frequency of the outputs, max.		

Data	SIMOTION D4x5-2 (-0AA0)	SIMOTION D4x5-2 (-0AA2)
• With resistive load	4 kHz	
• With inductive load	2 Hz	
• With lamp load	11 Hz	
Short-circuit protection	Yes	

1) Specification for Vcc = 24 V, load 48 Ohm, H = 90% V_{Out}; L = 10% V_{Out}

2) The digital inputs are protected against polarity reversal up to -30 V

3) A filter time of 1 µs or 125 µs can also be set for the X142 inputs.

Max. switching frequency of the DO

The max. switching frequency of the hardware depends on the load. For an ohmic load of 24 V / 0.5 A, it is up to 4 kHz (typical value; low-high ratio = 50:50; short cable lengths).

Logic control of the digital output is also a limiting factor.

- If an X142 DO is set or reset via the TO cam / TO camTrack, up to two edges are possible per servo or ServoFast cycle.
  → with servo cycles of at least 500 µs, a max. switching frequency of 2 kHz is achieved
  → with a ServoFast cycle clock (D435-2 DP/PN to D455-2 DP/PN only) of 250 µs, a max. switching frequency of 4 kHz is achieved
- If an X142 DO is set or reset from the user program, no more than one edge is possible per servo or ServoFast cycle.
  → with servo cycles of at least 500 µs, a max. switching frequency of 1 kHz is achieved
  → with a ServoFast cycle clock (D435-2 DP/PN to D455-2 DP/PN only) of 250 µs, a max. switching frequency of 2 kHz is achieved
- If an X122/X132 DO is set or reset from the user program, no more than one edge is possible per servo cycle.
  → with servo cycles of at least 500 µs, a max. switching frequency of 1 kHz is achieved
  The max. achievable switching frequency can also be limited by the CU parameter p0799[0] (sampling time of the inputs/outputs of the CU) or p2048 (PROFIdrive PZD sampling time).

Reproducibility

The reproducibility at the measuring input input depends on the edge steepness of the measurement signal. Generally, the following is valid: The steeper the edges of the input signal are, the easier it is to reproduce the measurement results. Sloping signals are achieved by switching the signal level to "active". This is typically with rising edges as the signal here is "actively" switched to HIGH by the digital output (example: Output of a TM17 module: Rising edge).

Falling edges typically have less edge steepness (signal level that falls slowly), as the signal level is "not actively" forced to LOW (example: Output of a TM17 module: Falling edge).

Recommendation:
Where the connected components do not have special output drivers, the recommendation is to use the rising edges for measurements.

Further technical data

Table 5-14 Fan, non-volatile data backup, and approvals

Data	SIMOTION D425-2 DP SIMOTION D425-2 DP/PN SIMOTION D435-2 DP SIMOTION D435-2 DP/PN	SIMOTION D445-2 DP/PN SIMOTION D455-2 DP/PN
Fan	Double fan/battery module is included in the scope of delivery*	Double fan/battery module is included in the scope of delivery*
• Buffer time, min. • Charging time, typ.	• 4 days (real-time clock backup) • A few minutes	• 4 days (real-time clock backup) • A few minutes

* No battery is included/required in the fan module for SIMOTION D4x5-2 (-0AA2).

If a double fan/battery module is used with included battery, the buffer time of the real-time clock is at least 3 years.

For further technical data such as the max. number of online connections, HMI devices that can be used as well as a list of tasks available in the execution system, see the function overview in the *SIMOTION PM 21* Catalog.

5.6 CompactFlash card/SD card

CompactFlash card

Table 5-15 CF card

Memory capacity	2 GB (Article no. 6AU1400-2QA20-0AA0) 1 GB (Article no. 6AU1400-2PA23-0AA0) 1 GB (Article no. 6AU1400-2PA22-0AA0) 1 GB (Article no. 6AU1400-2PA21-0AA0)
Weight	10 g

SD card

Table 5-16 SD card

Memory capacity	8 GB (Article no. 6AU1400-3SA20-0AA0)
Weight	3 g

5.7 Clock

Properties of the real-time clock

The following table lists the properties and functions of the SIMOTION D clock.

Table 5-17 Clock properties

Properties	Meaning
Type	Hardware clock (integrated "real-time clock")
Default setting when delivered	• 12:00 a.m. (Date 1 Jan 1992) • With D4x5-2 (-0AA2): 12:00 a.m. (Date 1 Jan. 2001)
Accuracy • +25° C • -40° C ... +85° C	Max. deviation per day: • ±2 s • ±5 s
Buffer time at least	• 4 days (at 0 ... 25° C) • With battery in the double fan/battery module 3 years • For fan module without battery 60 days • for D4x5-2 (-0AA2): 3 months
Charging time	A few minutes
Backup	Maintenance-free SuperCap or battery in the double fan/battery module

With power OFF

In the POWER OFF state, the SIMOTION D clock continues to run during the backup time (with the exception of the software clock). The backup battery is recharged in the POWER ON state.

An error message is output if the backup function is defective. When the power is switched ON, the clock then resumes at the time set at the factory.
If the SIMOTION D4x5-2 is reset to its factory setting, the clock is also reset to the "default setting when delivered".

5.8 Input and output circuit

Protective circuit

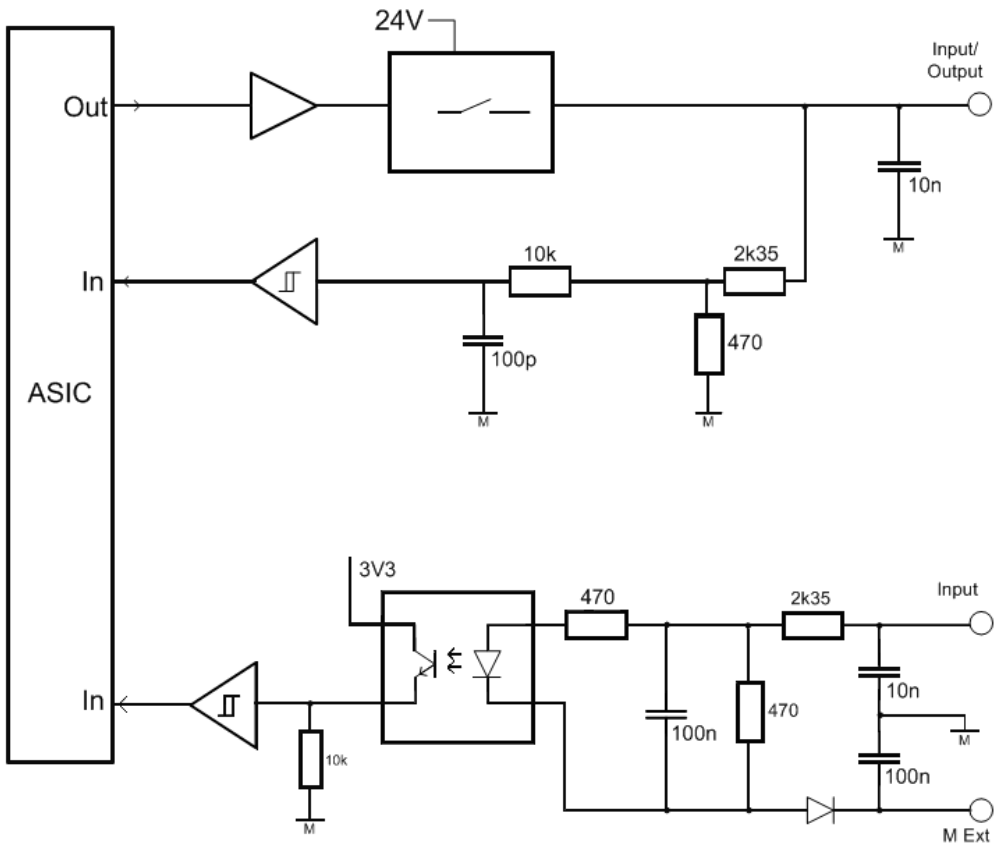

Figure 5-1 SIMOTION D4x5-2/CX32-2 input and output circuits

5.9 Certificates, approvals, declarations of conformity

You can find an overview of the certifications available for the SIMOTION D4x5-2 in Appendix A (Page 155).

You can also find further information on the Internet at:

https://support.industry.siemens.com/cs/ww/en/ps/14513/cert

Note

SIMOTION D435-2 DP/PN and D455-2 DP/PN are also available as SIPLUS version for use under harsh environmental conditions, e.g. in toxic atmospheres.

The SIPLUS versions can have different certifications/approvals. For details, refer to the technical data for the module in the Industry Mall.

https://mall.industry.siemens.com

Dimension drawings

6

6.1 D425-2 and D435-2 dimension drawing

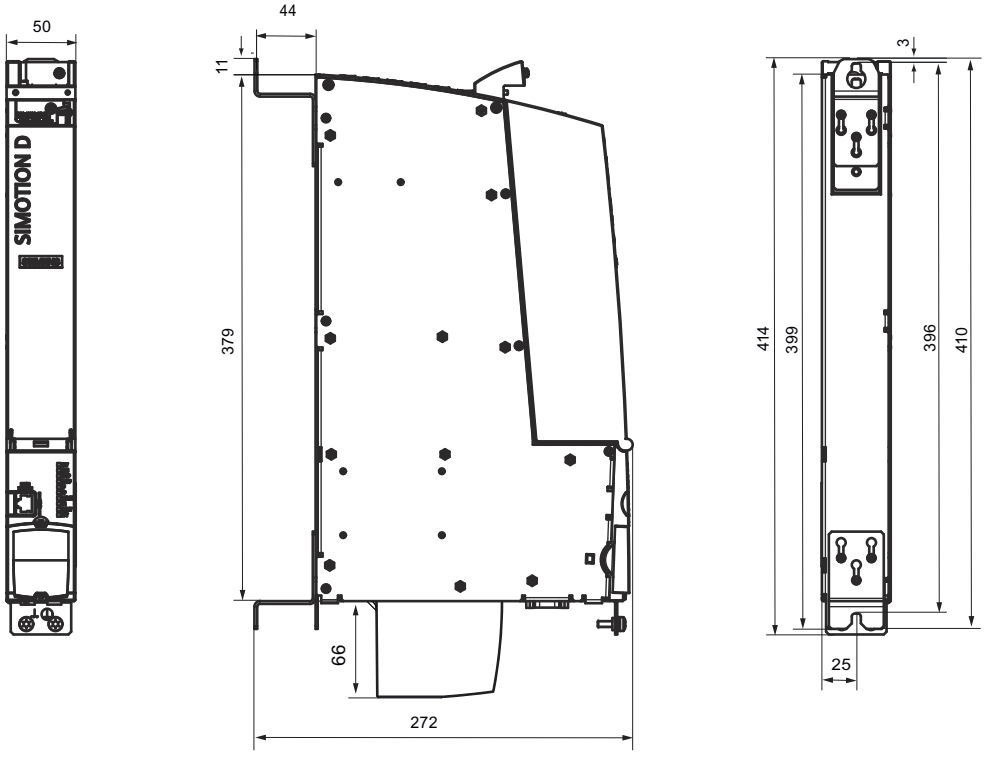

Figure 6-1 D425-2 and D435-2 dimension drawing (dimensions in mm)

SIMOTION D425-2 DP, D425-2 DP/PN, D435-2 DP and D435-2 DP/PN must always be operated with a double fan/battery module.

NOTICE
Higher operating temperature if ventilation clearances are too small The 80 mm clearances above and below the components must be observed. The unit protects itself from overheating by shutting down. The ventilation clearance is measured from the lower edge of the module, i.e. the fan/battery module is not included in the dimension.

6.2 D445-2 DP/PN and D455-2 DP/PN dimension drawing

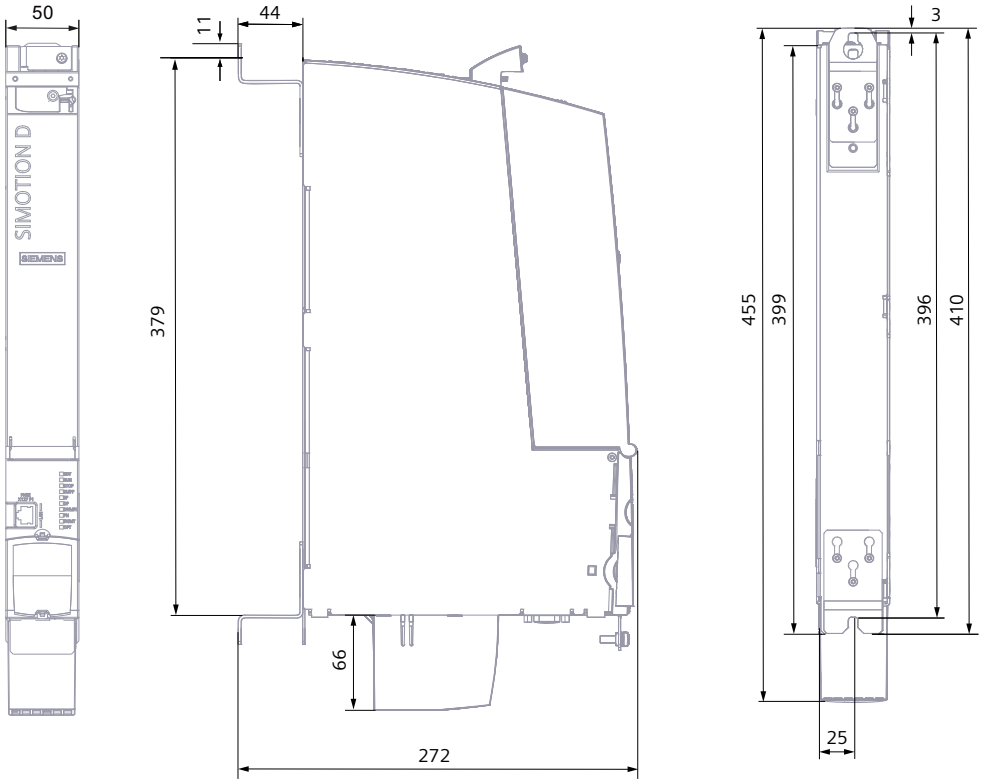

Figure 6-2 D445-2 DP/PN and D455-2 DP/PN dimension drawing (dimensions in mm)

SIMOTION D445-2 DP/PN and D455-2 DP/PN must always be operated with a double fan / battery module.

NOTICE
Higher operating temperature if ventilation clearances are too small The 80 mm clearances above and below the components must be observed. The unit protects itself from overheating by shutting down. The ventilation clearance is measured from the lower edge of the module, i.e. the fan/battery module is not included in the dimension.

6.3 CAD data, dimension drawings, and circuit-diagram macros

Dimension drawings and CAD data

Dimension drawings, as well as 2D and 3D CAD data can be found:

- In the CAD Creator (https://support.industry.siemens.com/cs/ww/en/view/30559271)
- In the DT Configurator (http://www.siemens.com/dt-configurator) of the Industry Mall
- Via CAx Download Manager (https://support.industry.siemens.com/my/ww/en/CAxOnline#CAxOnline))

Circuit-diagram macros

EPLAN circuit-diagram macros are available for SIMOTION D. The macros assist you when creating circuit diagrams.

The EPLAN circuit diagram macros can be ordered at the following Internet addresses:

- Drive Technology Configurator (http://www.siemens.com/dt-configurator)
- CAx Download Manager (https://support.industry.siemens.com/my/ww/en/CAxOnline#CAxOnline))
- Product support (https://support.industry.siemens.com/cs/ww/en/view/31622426)

See also

Macros (https://support.industry.siemens.com/cs/ww/en/view/31622426)

Supplementary system components

7

7.1 Connection options overview

Supplementary system components

The following figure shows the connection of the supplementary system components. The connection is:

- Directly on the SIMOTION D module (fan/battery module)
- Via the option slot (TB30, CBE30-2)
- Via the DRIVE-CLiQ interfaces (Terminal Modules, Control Unit Adapter, ...).

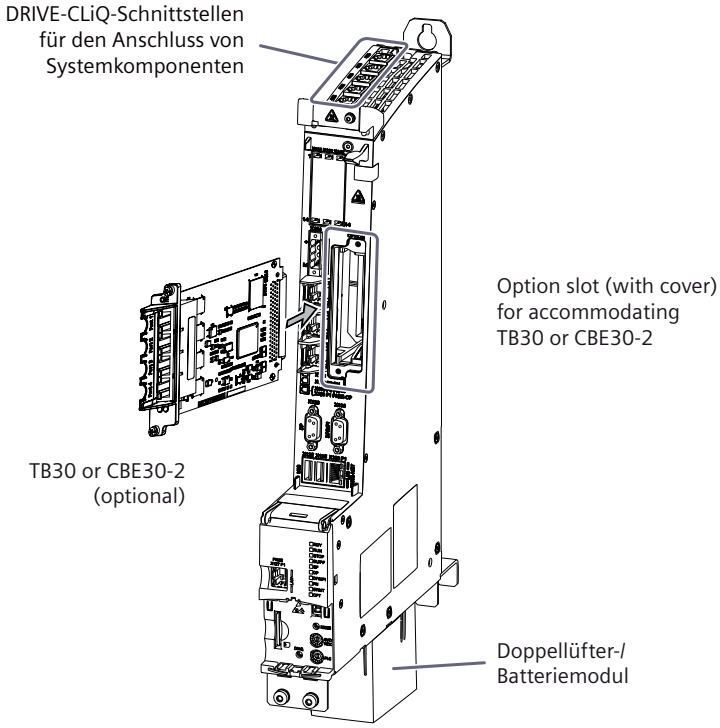

Figure 7-1 Connection of supplementary system components on the D4x5-2 (-0AA0)

Table 7-1 Applicable option modules

Module	Article number	D4x5-2 DP	D4x5-2 DP/PN
TB30	6SL3055-0AA00-2TA0	Yes	Yes
CBE30-2	6FC5312-0FA00-2AA0	No	Yes (as of V4.3)
CBE30	6FC5312-0FA00-0AA0	No	No

7.2 Fan/battery module

7.2.1 Cooling the SIMOTION D4x5-2 and backing up the real-time clock

Functions of a fan/battery module

The fan/battery module has the following tasks:

- CPU cooling
- Backing up the real-time clock if the SuperCap is insufficient.

The Control Unit monitors the temperature and the functioning of the fan.

Note

SIMOTION D4x5-2 (-0AA0/-0AA1) has a battery in the fan module, SIMOTION D4x5-2 DP/PN (-0AA2) does not have a battery in the fan module.

Cooling the SIMOTION D4x5-2

A fan/battery module is always required for cooling the SIMOTION D4x5-2 Control Unit.

Table 7-2 Fan/battery module for SIMOTION D4x5-2

Property	SIMOTION D425-2 DP SIMOTION D435-2 DP/PN	SIMOTION D435-2 DP SIMOTION D435-2 DP/PN	SIMOTION D445-2 DP/PN SIMOTION D455-2 DP/PN
Fan/battery module	Always required (double fan/battery module included in the scope of delivery)		
Usable fan/battery modules	Double fan/battery module, 6FC5348-0AA02-0AA0		
Max. permissible supply air temperature	55° C		
Fan control	Temperature-controlled fan unit will be switched on depending on supply air temperature and CPU load		

The double fan/battery module ensures sufficient cooling even with just one functional fan.

Note

Use of the fan/battery module **with one fan** (Article no. 6FC5348-0AA01-0AA0) on the D4x5-2 is **not** possible.

An entry is made in the diagnostics buffer when a fan fault occurs (failure of one or both fans in the double fan/battery module). The fan failure is also signaled by the generation of an event in the PeripheralFaultTask and via a system variable.

If only one of the fans fails, the remaining fan continues under full load.

If both fans fail or with overtemperature, the controller switches to the RESET state, whereby the SF LED flashes red/yellow (2 Hz) and the 7-segment display shows the state "8".

Fan faults are detected if through

- A cyclic fan test
- Or when the fan is switched on

a malfunction is detected (fan does not turn or fan turns at too low a speed).

Cooling clearance

NOTICE
Higher operating temperature if ventilation clearances are too small The ventilation clearances of 80 mm above and below the components must be observed. The unit protects itself from overheating by shutting down. The ventilation clearance is measured from the lower edge of the module, i.e. the fan/battery module is not included in the dimension.

Buffering data

For the retentive storage of process variables, the SIMOTION D4x5-2 has an NVRAM memory that permanently backs up the data against a power failure.
The real-time clock is backed up by a SuperCap and continues to run when there is a power failure. This backup is for at least 4 days.
If this buffer time is not sufficient, the real-time clock can be backed up by a battery that is inserted in the fan/battery module. The battery is already included in the scope of delivery of fan/battery modules.

Note

The buffer time when a battery is used is at least 3 years. Prior to part replacement, you should back up the NVRAM data additionally on the CF card/SD card via the application ("_savePersistentMemoryData").

The buffer time for SIMOTION D4x5-2 (-0AA2) is >3 months. No battery installed in the fan/battery module in this assembly.

Battery

A 3 V lithium battery can be inserted in the fan/battery module. The battery is pre-assembled with an approximately 4 cm long cable with plug connector. The matching mating connector is attached to a small printed circuit board for connection in the fan/battery module.

See also

- Available spare parts and accessories (Page 151)
- Commissioning and Hardware Installation Manual of the SIMOTION D4x5-2, section "Replacing the battery in the fan/battery module"

7.2.2 Installing the fan/battery module

Overview

The procedure for installing the double fan/battery module is described below.

Note

Note that SIMOTION D4x5-2 (-0AA0/-0AA1) also has a battery in the fan module, SIMOTION D4x5-2 (-0AA2) does not have a battery in the fan module.

NOTICE
The battery must be removed beforehand (in case of spare parts) when installing the double fan/battery module on a SIMOTION D4x5-2 (-0AA2). Remove the battery from the double fan/battery module **before** you install it on a SIMOTION D4x5-2 (-0AA2).

Procedure

There are cutouts on the lower side of the control unit to attach the module. Proceed as follows to install the double fan/battery module:

1. If required, insert a battery in the double fan/battery module.
2. Hold the double fan/battery module at an angle to the front with the open side facing up. The battery must be visible.

3. Push the plastic lug into the slot-like cutout on the lower side of the control unit.
4. Tilt the double fan/battery module up until the two latches snap into place at the front. Note the two contact strips that are lead through cutouts of the control unit.
   This establishes the electrical connection between the double fan/battery module and the control unit.

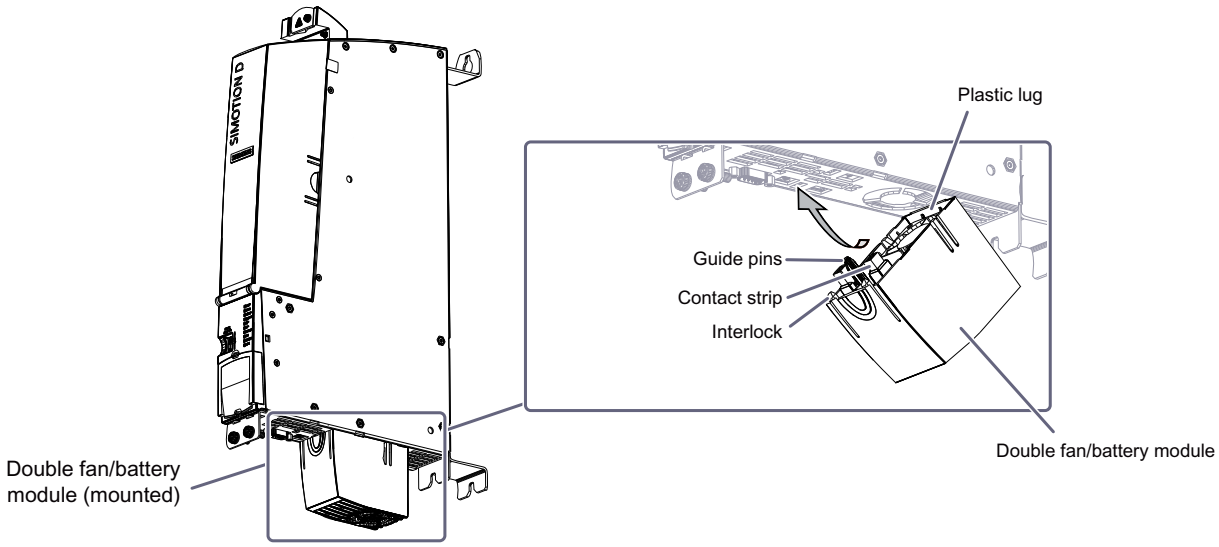

Figure 7-2 Installing the double fan/battery module

7.3 TB30 terminal board

7.3.1 Description

The TB30 terminal board is a terminal expansion module for SIMOTION D4x5-2. The module is inserted in the option slot of the D4x5-2 control unit.

Table 7-3 Interface overview of the TB30

Type	Quantity
Digital inputs	4
Digital outputs	4
Analog inputs	2
Analog outputs	2

7.3.2 Safety information for the TB30

NOTICE
Damage to the TB30 caused by electric fields or electrostatic discharge
Option boards are ESD-sensitive components.
De-energize the SIMOTION D4x5-2 device before inserting or removing the option board. The SIMOTION D4x5-2 is in a de-energized state when all the LEDs are off.
Observe ESD guidelines; for details, see Section ESD guidelines (Page 159).

7.3.3 Interfaces

7.3.3.1 Overview

The following figure shows the arrangement of the interfaces on the front of the TB30.

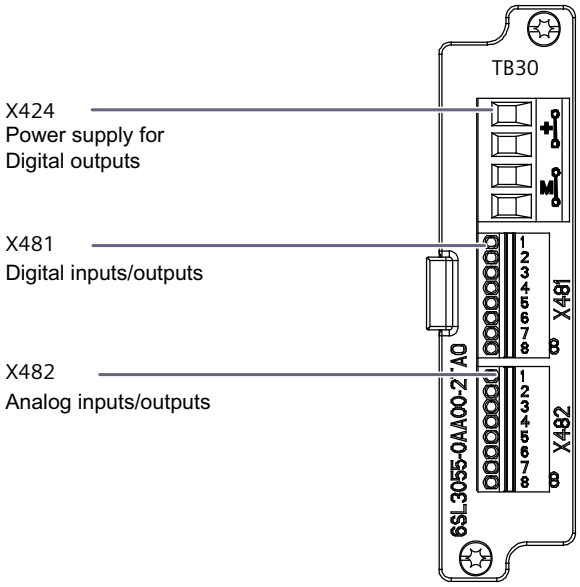

Figure 7-3 Interface arrangement on the TB30

7.3.3.2 Connection diagram

The following figure shows the schematic diagram of the TB30 as well as its connections for inputs (DI, AI), outputs (DO, AO) and power supply.

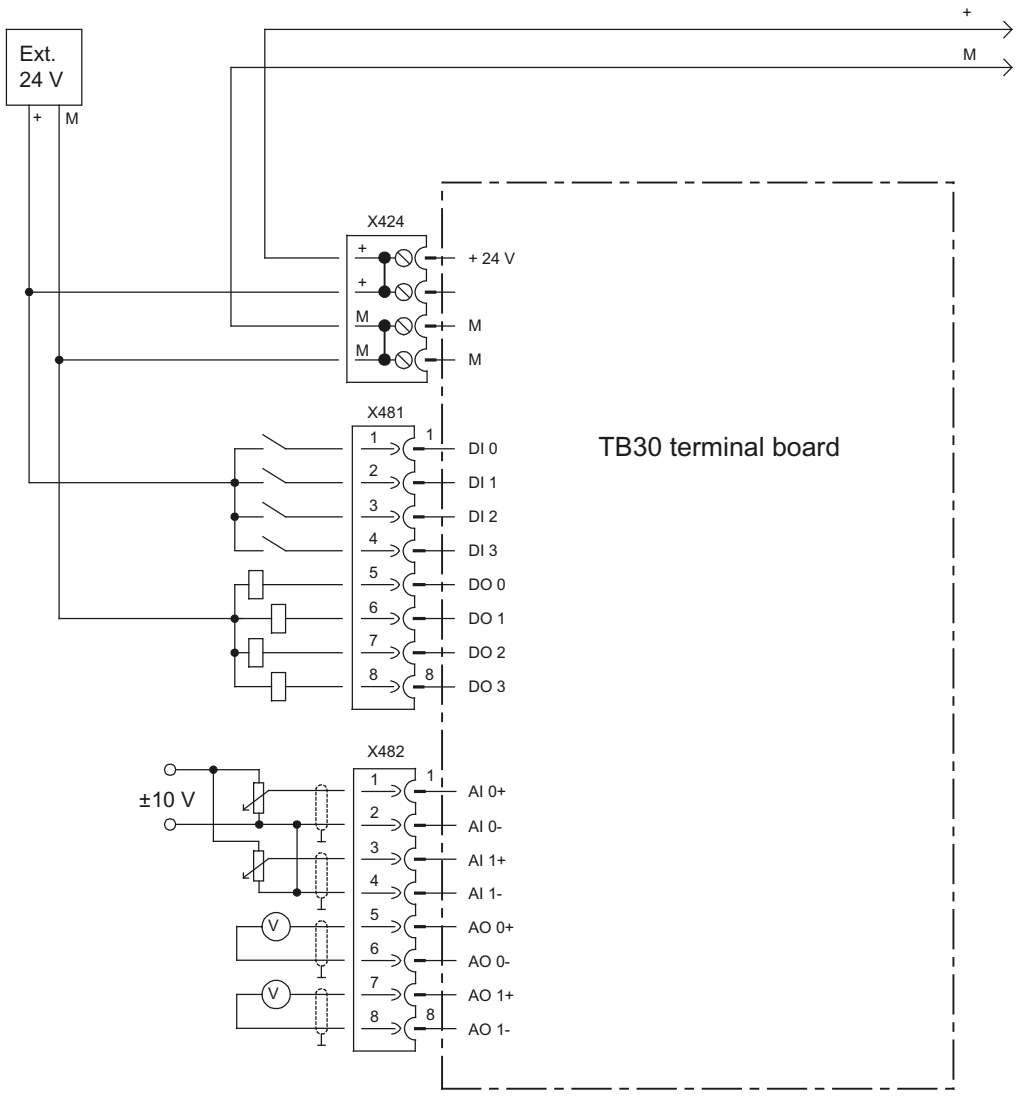

Figure 7-4 TB30 connection diagram

7.3.3.3 Power supply of digital outputs

Table 7-4 Terminal block X424

	Terminal	Function	Technical specifications
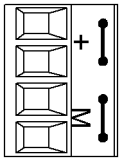	+	Power supply	Max. current via bridges in the connector: 20 A
	+	Power supply	
	G	Ground	
	G	Ground	

Table 7-5 X424 wiring

Features		Type
Connector type		4-way screw-type terminal
Number of cables that can be connected		1
Connectable cable types and conductor cross-sections		
	Rigid	0.2 mm² ... 2.5 mm²
	Flexible	0.2 mm² ... 2.5 mm²
	Flexible, with wire-end ferrule without plastic sleeve	0.2 mm² ... 2.5 mm²
	Flexible, with wire-end ferrule with plastic sleeve	0.2 mm² ... 1.5 mm²
	AWG / kcmil	22 ... 12
Stripped length		6 ... 7 mm
Tool		Screwdriver 0.5 x 3 mm (M2.5)
Tightening torque		0.4 to 0.5 Nm (3.5 ... 4.4 lbf in)
Max. current carrying capacity, incl. loop-through		20 A (15 A per UL/CSA)
Max. cable length		10 m

Features

Two "+" terminals and two "M" terminals are available. These are jumpered in the connector. This loops through the power supply.

This power supply is only required for the digital outputs.

The option slot of the D4x5-2 control unit also provides the following power supplies:

- Electronic power supply of the TB30
- Supply of the analog inputs and outputs.

The power supply of the digital outputs and the electronic power supply of the Control Unit are isolated.

7.3.3.4 Digital I/Os

Table 7-6 Terminal block X481

	Terminal	Designation[1)]
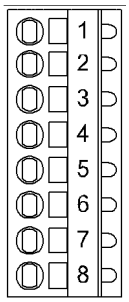	1	DI 0
	2	DI 1
	3	DI 2
	4	DI 3
	5	DO 0
	6	DO 1
	7	DO 2
	8	DO 3

1) DI: digital input, DO: Digital output

Table 7-7 X481 wiring

Characteristics	Type
Connectable cable types: - Rigid - Flexible - Flexible, with end sleeve without plastic sleeve - AWG/kcmil	Conductor cross-sections: 0.14 mm^2 to 0.5 mm^2 0.14 mm^2 to 0.5 mm^2 0.25 mm^2 to 0.5 mm^2 26 to 20
Number of cables that can be connected	1
Stripped length	8 to 9 mm
Tool	Screwdriver 0.4 x 2.0 mm
Max. cable length	30 m

Note

An open input is interpreted as "low".

The power supply and the digital I/Os are isolated from the control unit.

Note

With momentary interruptions in the 24 V supply, the digital outputs are deactivated during this time.

7.3.3.5 Analog inputs and outputs

Table 7-8 Terminal block X482

	Terminal	Designation[1)]
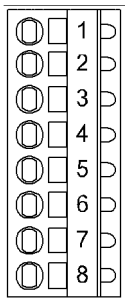	1	AI 0+
	2	AI 0-
	3	AI 1+
	4	AI 1-
	5	AO 0+
	6	AO 0-
	7	AO 1+
	8	AO 1-

Table 7-9 X482 wiring

Features	Type
Connectable conductor types - Rigid - Flexible - Flexible with end sleeve, without plastic sleeve - AWG/kcmil	Conductor cross-section 0.14 mm^2 to 0.5 mm^2 0.14 mm^2 to 0.5 mm^2 0.25 mm^2 to 0.5 mm^2 26 to 20
Number of cables that can be connected	1
Stripped length	8 to 9 mm
Tool	Screwdriver 0.4 x 2.0 mm
Max. cable length	30 m

Note

An open input is interpreted as approximately "0 V."

The power supply of the analog I/Os of the TB30 is via the option slot of the D4x5-2 control unit and not via X424.

The shield is connected to the Control Unit. For more information on "Establishing a shield connection", see the *SIMOTION D4x5-2* Commissioning and Hardware Installation Manual, Chapter "Connecting I/Os."

NOTICE
Incorrect results of analog-to-digital conversion due to impermissible input voltage The common mode range must not be violated. Makes sure that the analog input voltage signals can have a maximum voltage of ±30 V with respect to the reference potential. If the range is infringed, incorrect results may occur during analog/digital conversion.

7.3.3.6 Working with analog inputs

The following reference contains more information about analog inputs:

- /IH1/ *SINAMICS S120* Commissioning Manual.
- /GH1/ *SINAMICS S120* Control Units and Additional System Components Manual

7.3.3.7 Commissioning

Information about commissioning can be found in the *SIMOTION D4x5-2*Commissioning and Hardware Installation Manual.

7.3.4 Technical Specifications

Power supply of digital outputs

Table 7-10 Terminal block X424

Characteristic	Value/Range
Power supply	Voltage: 24 VDC (20.4 V – 28.8 V) Current via the option slot of the D4x5-2 (without digital outputs): 0.05 A Max. power consumption: 4 A Max. power consumption per digital output: 0.5 A Power loss: < 3 W
Response time	The response time of digital inputs/outputs and analog inputs/outputs depends on the evaluation on the Control Unit (see function diagram). **References:** SINAMICS S120/S150 List Manual, Section "Function diagrams".

Digital I/Os

Table 7-11 Terminal block X481

Characteristic	Value/Range
Digital inputs	Voltage: - 3 V to 30 V Current input (typical): 10 mA at 24 VDC Ground reference: X424 (G terminal) Input delay: - L ⇒ H: Approx. 20 µs - H ⇒ L: Approx. 100 µs Level (including ripple): - High level: 15 V to 30 V - Low level: -3 V to 5 V
Digital outputs	Voltage: 24 VDC Max. load current per output: 500 mA Ground reference: X424 (M terminal) Continuous short-circuit proof Output delay: - L ⇒ H: Typically 150 µs at 0.5 A ohmic load (500 µs max.) - H ⇒ L: Typically 50 µs at 0.5 A ohmic load Switching frequency: - for resistive load: Max. 100 Hz - for inductive load: Max. 0.5 Hz - for lamp load: Max. 10 Hz Maximum lamp load: 5 W

Analog I/Os

Table 7-12 Terminal block X482

Characteristic	Value/Range
Analog inputs (AI):	Voltage: - -10 V to +10 V Internal resistance: 65 kΩ Resolution: 13 bits + sign
Analog outputs (AO):	Voltage range: -10 V to +10 V Load current: max. -3 mA to +3 mA Resolution: 11 bits + sign Sustained short-circuit strength

Dimensions and weight

Characteristic	Value
Dimensions (H x W x D), approx.	25 x 95 x 143 mm
Weight [g]	• Without packaging approx. 100 g • With packaging approx. 240 g

7.4 CBE30-2 Ethernet communication board

7.4.1 Overview

Properties of the CBE30-2

A second PROFINET interface can be implemented for the SIMOTION D4x5-2 DP/PN with the CBE30-2 Ethernet communication board.

The CBE30-2 cannot be used with the SIMOTION D4x5-2 DP.

The CBE30-2 offers the following functions:

- PROFINET IO controller, I device (also controller and device simultaneously)
- 100 Mbps full duplex / autocrossing
- Supports real-time classes of PROFINET IO:
  - RT (real-time)
  - IRT (isochronous real-time)

The CBE30-2 has an X1400 interface with an integral 4-port switch based on PROFINET ASICs ERTEC400.

View

The connections and LED displays are located on the front of the CBE30-2.

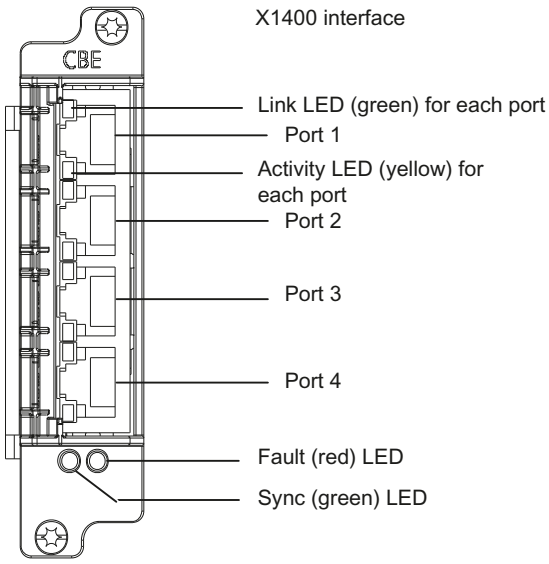

Figure 7-5 CBE30-2 front view

7.4.2 Type plate

Type plate

The figure below contains all the information included on the type plate.

Figure 7-6 CBE30-2 type plate

You might need to access the information provided on the type plate after mounting. Because the type plate is located on the under side of the CBE30-2, we recommend that you note the serial number before installing it.

Note

The contents of the individual type plate fields of the CBE30-2 may differ from those described in this manual (e.g. updated product status, approvals and markings not yet issued, etc.). KCC (Korea Communications Commission) for CBE30-2 is marked with a separately attached plate.

MAC address

A second plate for the MAC address of the PROFINET interfaces is attached to the top side of the board:

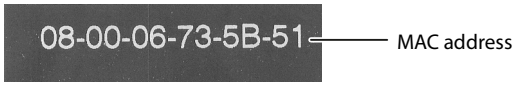

Figure 7-7 CBE30-2 MAC address

This plate is only visible when the CBE30-2 has been removed. You need the MAC address to assign an IP address.

Note

The MAC address is affixed to the top side of the CBE30-2, behind the RJ45 sockets.

7.4.3 Safety information

NOTICE
CBE30-2 damage caused by electric fields or electrostatic discharge Option boards are ESD-sensitive components. De-energize the SIMOTION D4x5-2 device before inserting or removing the option board. The SIMOTION D4x5-2 is in a de-energized state when all the LEDs are off. Observe the ESD guidelines (see Section ESD guidelines (Page 159)).

7.4.4 Interface description

Properties

The X1400 interface has full-duplex 10/100 Mbit Ethernet ports. The module has an integrated 4-port switch.

Interface characteristics

Table 7-13 X1400 features

Characteristic	Type
Connector type	RJ45 socket
Cable type	Industrial Ethernet cable
Maximum cable length	100 m
Dust protection filler plugs for sealing unused PROFINET ports	Five filler plugs contained in the D4x5-2 scope of delivery Filler plugs (50 pcs) article number: 6SL3066-4CA00-0AA0

Interface assignment

Table 7-14 X1400 interface

Representation	Pin	Name	Signal type	Description
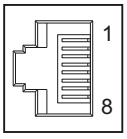	1	TXP	Output	Ethernet transmit differential signal
	2	TXN	Output	Ethernet transmit differential signal
	3	RXP	Input	Ethernet receive differential signal
	4	--		4 together with 5 via 75 ohm at the 1 nF capacitor to the shield ground
	5	--		4 together with 5 via 75 ohm at the 1 nF capacitor to the shield ground
	6	RXN	Input	Ethernet receive differential signal
	7	--		7 together with 8 via 75 ohm at the 1 nF capacitor to the shield ground
	8	--		7 together with 8 via 75 ohm at the 1 nF capacitor to the shield ground
	Screened backshell	M_EXT		Screen, permanently connected

Position of the ports

The interfaces are located on the front side of the CBE30-2.

Figure 7-8 CBE30-2 interface

7.4.5 LED displays

Position of the LEDs

The X1400 interface with the four ports has integrated LEDs for displaying the link and the activity for each port. The front panel of the board is also fitted with two LEDs (Fault and Sync), which indicate the bus status.

Table 7-15 Meaning of the LED displays

LED	Meaning
link	... indicates whether a different device is connected to port x and a physical connection exists
Activity	... indicates whether data is being received or sent at port x
Sync	... indicates the synchronization status of the PROFINET IO interface
Fault	... indicates a fault state of the PROFINET IO interface

Additional references

Detailed information on the states of the status LEDs can be found in the *SIMOTION D4x5-2* Commissioning and Hardware Installation Manual, Section *Diagnostics*.

7.4.6 Dimension drawing

CBE30-2 representation

The following illustrations show the components in four views.

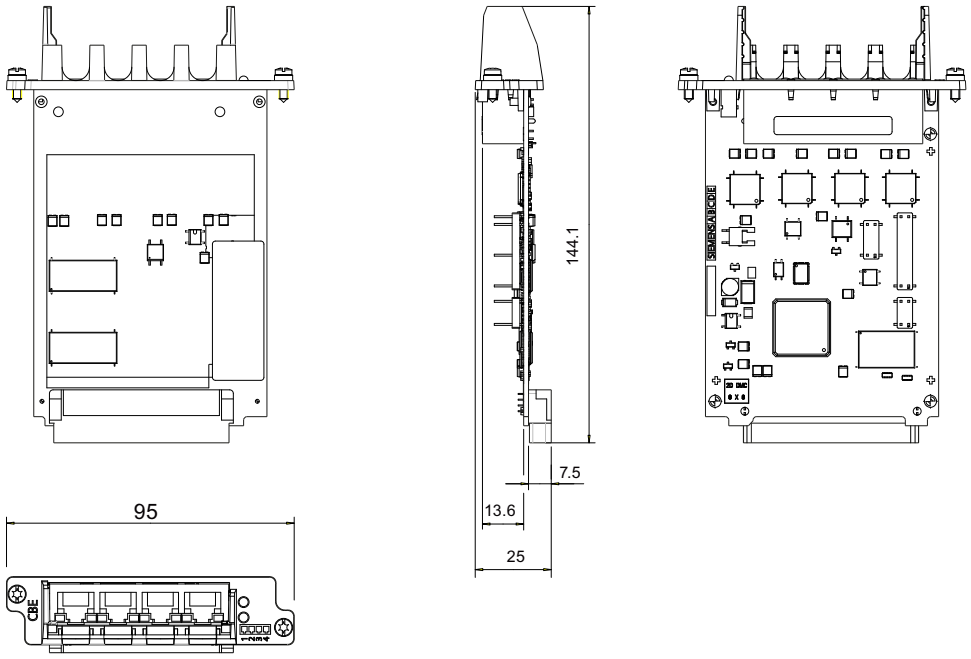

Figure 7-9 CBE30-2 dimension drawing (dimensions in mm)

7.4.7 Commissioning

Additional references

- *SIMOTION D4x5-2* Commissioning and Hardware Installation Manual
- *SIMOTION Communication* System Manual

7.4.8 Technical data

CBE30-2 technical data

Table 7-16 CBE30-2 technical data

Characteristic	Value
Current requirement at 24 VDC	0.25 A

Storage and operation

Table 7-17 Ambient conditions for CBE30-2

Characteristic	Value/Range	Standard
Permissible ambient temperature • Storage • Operation	 -40° C... +70° C 0° C ... +55° C	
Permissible relative humidity (without condensation)	> 5% to 95%	DIN EN 60721-3-3, Class 3K5
Degree of protection	IP00	DIN EN 60529
Vibratory load		DIN EN 60721-3-3, Class 3M6
Shock load		DIN EN 60721-3-3, Class 3M4
Free fall		DIN EN 60721-3-2, Class 2M1 and 2M2
Toppling		DIN EN 60721-3-2, Class 2M1

Dimensions and weight

Characteristic	Value
Dimensions (H x W x D)	25 x 95 x 143 mm
Weight [g]	• Without packaging approx. 100 g • With packaging approx. 240 g

Certificates, approvals, declarations of conformity

You can find an overview of the certifications available for the SIMOTION CBE30-2 in Appendix A (Page 155).

You can also find further information on the Internet at:

https://support.industry.siemens.com/cs/ww/en/ps/14513/cert

7.5 CX32-2 controller extension

7.5.1 Overview of CX32-2

Properties

The CX32-2 (Article No. 6AU1432-0AA00-0AA0) is a module in the SINAMICS S120 booksize format. The CX32-2 allows scaling for the drive-end computing performance of the SIMOTION D4x5-2 Control Units.

Each CX32-2 can control up to 6 additional servo, 6 vector or 12 *V/f* axes.
The Controller Extension has 6 DI, 4 DI/DO, and 4 DRIVE-CLiQ interfaces.

Note

The CX32 (Article No. 6SL3040-0NA00-0AA0) cannot be used with the D4x5-2. If an incorrect Controller Extension is used, a topology error will be signaled (F01360 Topology: Actual topology not permitted).

Drive quantity structure

Table 7-18 Drive quantity structure

Characteristic	Quantity structure
Number of CX32-2	D425-2: Max. 3 CX32-2 D435-2/D445-2/D455-2: Max. 5 CX32-2
Maximum number of drives on the SINAMICS Integrated with connected CX32-2	• 6 servo or • 6 vector or • 12 *V/f* incl. an infeed (ALM, BLM, SLM)
Maximum number of drives per CX32-2	• 6 servo or • 6 vector or • 12 *V/f* incl. an infeed (ALM, BLM, SLM)

The maximum quantity structures can be reduced depending on the configuration (for example, for connected Terminal Modules).

Note

In principle, a fourth CX32-2 can be connected to the SIMOTION D425-2 and a sixth CX32-2 to the SIMOTION D435-2/D445-2/D455-2.

Note however that no further drives can then be connected on the SINAMICS Integrated of the D4x5-2. Possible fields of application, for example, are modular machine concepts with a central controller.

Note

Mixed operation of servo and vector-controlled drives

Mixed operation of servo and vector-controlled drives is not possible on a CX32-2. Therefore, drives on a CX32-2 must be operated either in servo or in vector mode only. The following mixed operation is possible on a CX32-2:

- Servo and *V*/*f*-controlled drives
- Vector and *V*/*f*-controlled drives

This corresponds to the possible mixed operation on the SIMOTION D4x5-2.

V/f-controlled drives

A maximum of 12 *V*/*f*-controlled drives are supported by each CX32-2.

SIZER

For a detailed estimation of the drive quantity structures, we recommend that you use the SIZER configuration tool.

With SIZER, you can easily configure the SINAMICS S120 drive family including SIMOTION. It provides you with support for selecting and dimensioning the components required for a Motion Control task.

You can also determine the possible number of axes and the resulting load with SIZER in accordance with your performance requirements.

7.5.2 Interfaces

7.5.2.1 Overview of interfaces

Position of the interfaces

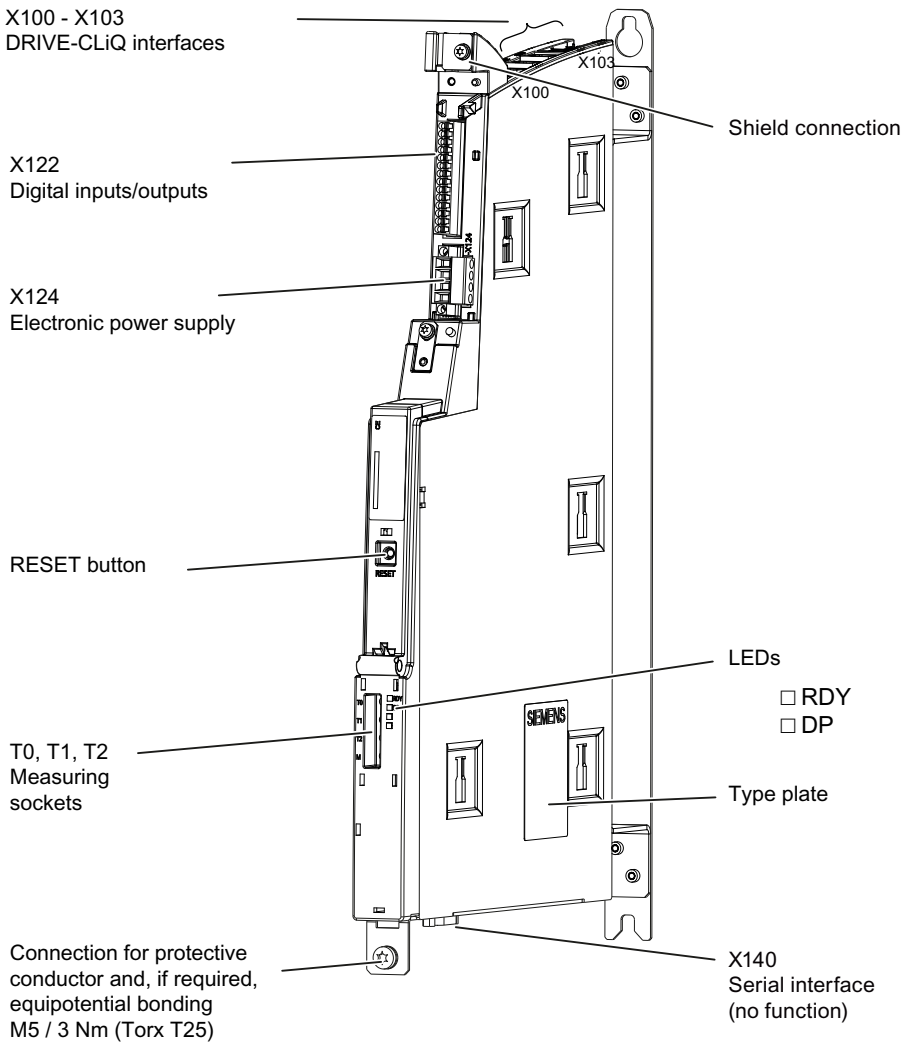

Figure 7-10 CX32-2 (without cover) with interfaces and operator control

NOTICE
Higher operating temperature if ventilation clearances are too small The 80 mm clearances above and below the components must be observed. The unit protects itself from overheating by shutting down. The ventilation clearance is measured from the lower edge of the module, i.e. the fan/battery module is not included in the dimension.

7.5.2.2 List of interfaces

The CX32-2 has the following interfaces:

- 4 DRIVE-CLiQ interfaces
- 4 digital inputs/outputs
- 6 digital inputs
- Power supply connector

Available interfaces

Table 7-19 Overview of available interfaces

Interface	Designation	Connector type
DRIVE-CLiQ interface	X100	DRIVE-CLiQ socket
DRIVE-CLiQ interface	X101	DRIVE-CLiQ socket
DRIVE-CLiQ interface	X102	DRIVE-CLiQ socket
DRIVE-CLiQ interface	X103	DRIVE-CLiQ socket
Digital inputs/outputs	X122	Mini Combicon, 3.5 mm, 1x14-pin
Power supply connector	X124	Combicon, 4-pin
Measuring sockets (T0, T1, T2, and M)	X131 - X134	Sockets

Non-usable interfaces

Table 7-20 Overview of interfaces that cannot be used for the CX32-2

Interface name	Interface	Connector type
RS232 interface	X140	9-pin Sub-D connector

7.5.2.3 DRIVE-CLiQ interface

Table 7-21 DRIVE-CLiQ interface X100 – X103

	Pin	Signal name	Technical specifications
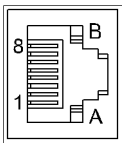	1	TXP	Transmit data +
	2	TXN	Transmit data -
	3	RXP	Receive data +
	4	Reserved, do not use	
	5	Reserved, do not use	
	6	RXN	Receive data -
	7	Reserved, do not use	
	8	Reserved, do not use	
	A	+ (24 V)	Power supply
	B	M (0 V)	Electronic ground
Dust protection filler plugs for sealing unused DRIVE-CLiQ ports: • Three filler plugs contained in the CX32-2 scope of delivery • Filler plugs (50 pcs) article number: 6SL3066-4CA00-0AA0			

7.5.2.4 Digital I/Os (X122)

Interface characteristics

Sensors and actuators can be connected to the X122 connector via digital inputs and outputs.

Table 7-22 X122 wiring

Features		Type
Connector type		14-way spring-loaded terminal
Number of cables that can be connected		1
Connectable cable types and conductor cross-sections		
	Rigid	0.2 mm² ... 1.5 mm²
	Flexible	0.2 mm² ... 1.5 mm²
	Flexible, with wire-end ferrule without plastic sleeve	0.25 mm² ... 1.5 mm²
	Flexible, with wire-end ferrule with plastic sleeve	0.25 mm² ... 0.75 mm²
	AWG / kcmil	24 ... 16
Stripped length		10 mm
Tool		Screwdriver 0.4 x 2.0 mm
Max. cable length		30 m
Max. current carrying capacity (ground)		6 A

Position of the connector

The X122 connection is on the front side of the CX32-2 at the top, see appropriate figure in Section Overview of interfaces (Page 132).

Connection and circuit diagram

The following figure shows the schematic diagram and the connection of the digital I/Os on the CX32-2 and the associated external power supply.

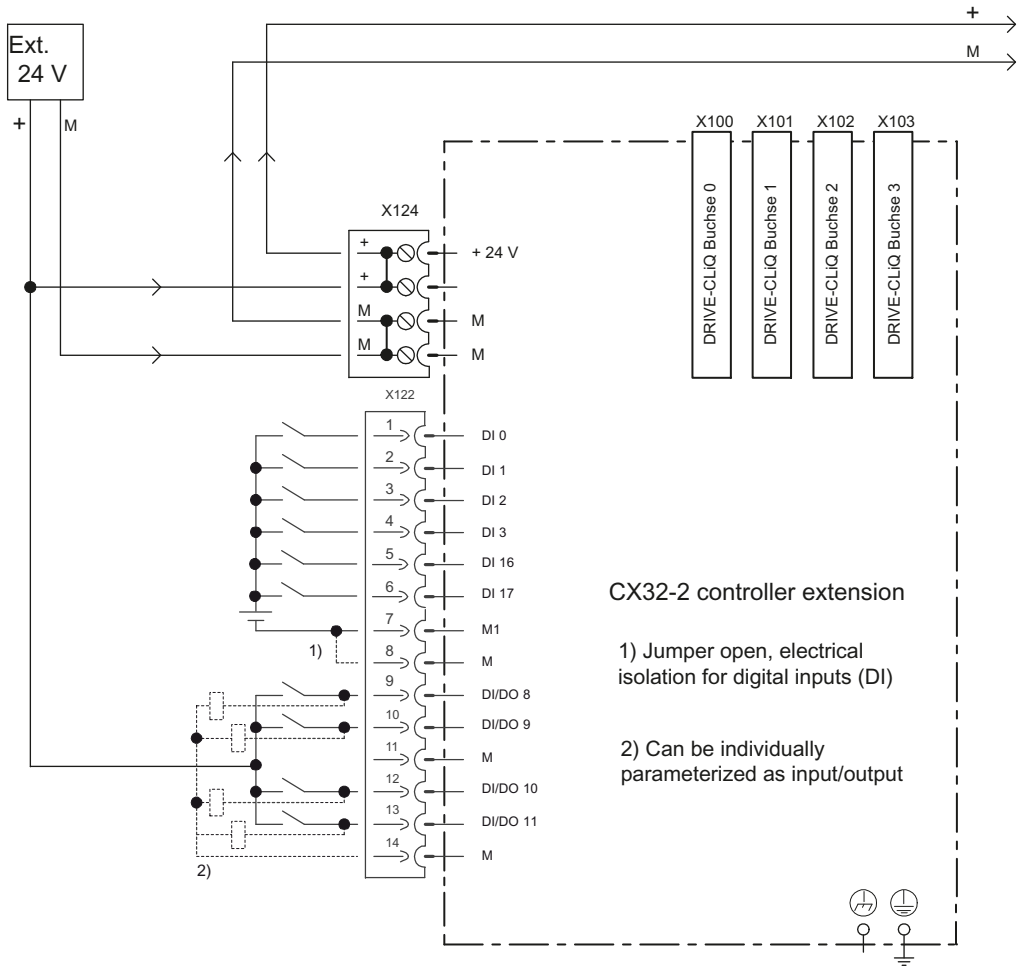

Figure 7-11 Digital I/Os connection diagram

Interface assignment of X122

Table 7-23 Digital inputs/outputs X122

Pin	Designation [1]	Signal type [2]	Notes
1	DI 0	I	Digital input 0
2	DI 1	I	Digital input 1
3	DI 2	I	Digital input 2
4	DI 3	I	Digital input 3
5	DI 16	I	Digital input 16
6	DI 17	I	Digital input 17
7	M1	GND	Ground for DI 0 – DI 3, DI 16, DI 17 (electrically isolated relative to G)
8	G	GND	Ground
9	DI/DO 8	B	Digital input/output 8 (can also be used as a measuring input input or as an input for the external zero mark)
10	DI/DO 9	B	Digital input/output 9 (can also be used as a measuring input input or as an input for the external zero mark)
11	G	GND	Ground
12	DI/DO 10	B	Digital input/output 10 (can also be used as a measuring input input or as an input for the external zero mark)
13	DI/DO 11	B	Digital input/output 11 (can also be used as a measuring input input or as an input for the external zero mark)
14	G	GND	Ground

[1] DI: Digital input; DI/DO: Bidirectional digital input/output; M: Electronics ground; M1: Ground reference

[2] B = Bidirectional; I = Input; GND = Reference potential (ground)

Note

An open input is interpreted as "Low".
Terminal G1 must be connected for the digital inputs to function. The following alternatives are available:

- Connect the incorporated ground reference of the digital input to M1
- Create the bridge between terminal M and terminal M1.
  This removes the electrical isolation for these digital inputs.

Using the digital inputs/outputs

Connecting sensors and actuators

Digital inputs and digital outputs can be used to connect various sensors and actuators to the 14-pin X122 front connector.

The following types of digital inputs/outputs are used:

- Digital inputs (DI)
- Bidirectional digital inputs/outputs (DI/DO)

Bidirectional digital I/Os can be configured individually as digital inputs or outputs.

Assignment of the I/Os to functions can be parameterized as required. Special functions (e.g. input of the measuring input) can be assigned to the I/Os.

The digital inputs/outputs on the X122 front connector can be used by either SIMOTION or SINAMICS (e.g. as enable signal for a drive).

Table 7-24 Use of the digital inputs/outputs

	DI 0-3, DI 16, DI 17 (X122)	**DI/DO 8-11 (X122)**
Galvanic isolation	Electrically isolated (ground reference M1)	Non-isolated (ground reference M)
Use as:		
• Freely addressable I/Os for SIMOTION	yes	yes
• I/Os that are assigned to the drive	yes	yes
• Measuring inputs	no	Yes (global and local measuring inputs)
• Inputs for the external zero mark	no	yes
• Cam outputs	no	no
Configuration:		
Assignment	Can be configured channel-by-channel on the drive	Can be configured channel-by-channel on the drive

Note

For optimal noise immunity of the digital inputs, the use of shielded cables is necessary in certain cases. This is necessary when the digital inputs are to be used as

- Inputs of measuring inputs or
- Inputs for the external zero mark

Additional references

For information on configuring the I/Os as freely addressable I/Os or as measuring inputs, see the *SIMOTION D4x5-2* Commissioning and Hardware Installation Manual.

For information on the configuration and function of the measuring input, output cam, and cam track technology objects, see the *SIMOTION Output Cams and Measuring Inputs* Function Manual.

7.5.2.5 Power supply

Application

This interface is provided for the connection of an external power supply.

Note

When using external power supplies (e.g. SITOP), the ground potential must be connected with the protective ground terminal (PELV).

Note

Ground potential and housing (PE) are connected internally with low impedance.

Features of the interface

Table 7-25 Interface X124

Features		Type
Connector type		4-way screw-type terminal
Number of cables that can be connected		1
Connectable cable types and conductor cross-sections		
	Rigid	0.2 mm² ... 2.5 mm²
	Flexible	0.2 mm² ... 2.5 mm²
	Flexible, with wire-end ferrule without plastic sleeve	0.2 mm² ... 2.5 mm²
	Flexible, with wire-end ferrule with plastic sleeve	0.2 mm² ... 1.5 mm²
	AWG / kcmil	22 ... 12
Stripped length		6 ... 7 mm
Tool		Screwdriver 0.5 x 3 mm (M2.5)
Tightening torque		0.4 to 0.5 Nm (3.5 ... 4.4 lbf in)
Max. current carrying capacity, incl. loop-through		20 A (15 A per UL/CSA)
Max. cable length		10 m

Interface assignments

Table 7-26 Power supply X124

Pin	Signal name	Meaning
1	P24	Power supply 24 V
2	P24	Power supply 24 V
3	G	Ground
4	G	Ground

Note

The 24 V supply voltage is looped through via the 24 V connector. In this case, pin 1 is jumpered with pin 2, and pin 3 is jumpered with pin 4 in the connector. The maximum current can be limited through the current carrying capacity of the cable. The current carrying capacity of the cable depends, for example, on the type of cable installation (cable duct, laying on a cable rack, etc.)

Note

The power supply terminal strip must be screwed on tightly using a flat-bladed screwdriver.

7.5.2.6 Measuring sockets

Application

The T0, T1 and T2 measuring sockets are used to output analog signals. Any signal interconnectable via SINAMICS can be output on any measuring socket of the CX32-2.

Note

The measuring sockets should be used exclusively for servicing purposes.

The measurements may only be performed by appropriately trained specialists.

The measuring sockets are suited for multiple-spring wire connectors with a diameter of 2 mm.

7.5.3 Displays of the LEDs

Description

Table 7-27 CX32-2 LEDs

LED	Description
RDY	Operating modes of the CX32-2
DP	Status of the communication connection between the D4x5-2 and the CX32-2

Additional references

Detailed information on the states of the status LEDs can be found in the *SIMOTION D4x5-2* Commissioning and Hardware Installation Manual, Section *Diagnostics*.

7.5.4 Cause and rectification of faults

The following reference contains information about the cause of faults and how they can be rectified:

- *SIMOTION D4x5-2* Commissioning and Hardware Installation Manual.

7.5.5 RESET button

The RESET button is on the front of the device under the cover.

Function of the RESET button

The following reference contains information about the RESET button function:

- *SIMOTION D4x5-2* Commissioning and Hardware Installation Manual.

7.5.6 Commissioning

Information on the commissioning in the following reference:

SIMOTION D4x5-2 Commissioning and Hardware Installation Manual.

7.5.7 Technical data of the CX32-2

Memory for system data

Table 7-28 Diagnostic buffer

Data	SIMOTION CX32-2
Diagnostic buffer (non-volatile)	200 messages

The data for the CX32-2 is stored on the SIMOTION D4x5-2, which means no action has to be taken on the CX32-2 when the module is replaced.

Dimensions and weights

Table 7-29 Dimensions and weight of a SIMOTION CX32-2

Parameter	SIMOTION CX32-2
Dimensions W x H x D [mm] (max. expansion) • Without fastening using spacers • With fastening using spacers	 • 25 x 380 x 230 • 25 x 380 x 270
Weight CX32-2 [g] • Without packaging • With packaging	 • approx. 2600 • approx. 3150

Ambient conditions

The following conditions apply to modules that are shipped and stored in the original packaging.

Table 7-30 CX32-2 environmental requirements

Parameter	Values
Permissible ambient temperature	
• Transport • Long-term storage • Operation	• -40° C ... +70° C • -25° C ... +55° C • 0° C ... +55° C up to 2000 m above sea level. As of an altitude of 2000 m, the maximum ambient temperature decreases by 7° C every 1000 m increase in altitude
Atmospheric pressure	620 ... 1060 hPa
Permissible relative humidity	
• During transport and storage • During operation (condensation, icing, drip, spray and splash water not permitted)	• 10% ... 100% • 5% ... 90%
Installation altitude	Max. 4000 m above sea level. For SINAMICS S120 drive components, see SINAMICS Manuals.
Biological environmental conditions • Storage • Transport • Operation	 • Class 1B1 according to EN 60 721-3-1 • Class 2B1 according to EN 60 721-3-2 • Class 3B1 according to EN 60 721-3-3
Degree of protection according to EN 60529 (IEC 60529)	IP20
Pollution degree	2 according to EN 60 664-1

Integrated drive control

Table 7-31 Controls for integrated drives

Data	SIMOTION CX32-2
Max. number of axes for integrated drive control (servo/vector/*V*/*f*)	6 / 6 / 12 (alternative) Drive control based on SINAMICS S120 CU320-2, firmware version V4.x/V5.x

Communication

Table 7-32 Interface communication

Data	SIMOTION CX32-2
DRIVE-CLiQ interfaces	4

General technical data

Table 7-33 Technical data (general)

Data	SIMOTION CX32-2
Power supply • Rated value • Permissible range	 24 VDC (20.4 ... 28.8 V)
Current consumption, typically [1]	300 mA
Starting current, typical	1.6 A
Power loss, typical	7 W
Power loss, max.	14 W

[1] With no load on inputs/outputs, no 24-V supply via DRIVE-CLiQ interface

Digital inputs

Table 7-34 Digital inputs on SIMOTION CX32-2

Data	SIMOTION CX32-2
Digital inputs	6
• Rated value	24 VDC
• For signal "1"	15 ... 30 V
• For signal "0" [2]	-3 ... +5 V
Galvanic isolation	Yes, in groups of 6 [1]

Data	SIMOTION CX32-2
Current consumption typ. at High level	3.5 mA at 24 V 9 mA at 24 V [3]
Input delay, typical (hardware)	Signal "0" → "1": 50 µs Signal "1" → "0": 150 µs

[1] The reference potential is terminal M1

[2] The digital inputs are protected against polarity reversal up to -30 V

[3] Up to and including HW version "D"

Digital inputs/outputs (parameterizable)

Table 7-35 Digital inputs/outputs on SIMOTION CX32-2

Data	SIMOTION CX32-2
Number of digital inputs/outputs	4 • Max. 4 as measuring input inputs • Max. 0 as output cam outputs
If used as an input:	
• Input voltage, rated value	24 VDC
• Input voltage, for signal "1"	15 ... 30 V
• Input voltage, for signal "0" [2]	-3 ... +5 V
Galvanic isolation	No
Current consumption typ. at signal level "1"	3.5 mA at 24 V 9 mA at 24 V [3]
Input delay, typical (hardware)	Signal "0" → "1": 5 µs Signal "1" → "0": 50 µs
Measuring input input, resolution	1 µs
Measuring input input, reproducibility	5 µs
If used as an output	
• Rated load voltage, permissible range	24 VDC, 20.4 ... 28.8 V
• Galvanic isolation	No
• Current load, max.	500 mA per output
• Residual current, max.	2 mA
• Output delay time, typical/max. (hardware) [1]	Signal "0" → "1": 150 µs / 400 µs Signal "1" → "0": 75 µs / 100 µs
Switching frequency of the outputs, max.	
• With resistive load	4 kHz
• With inductive load	2 Hz
• With lamp load	11 Hz

Data	SIMOTION CX32-2
Maximum lamp load	5 W
Short-circuit protection	Yes

1) Data for: Vcc = 24 V; load 48 Ohm; H = 90% V_{out}, L = 10% V_{out}

2) The digital inputs are protected against polarity reversal up to -30 V

3) Up to and including HW version "D"

Max. switching frequency of the DO

The max. switching frequency of the hardware depends on the load. For an ohmic load of 24 V / 0.5 A, it is up to 4 kHz (typical value; low-high ratio = 50:50; short cable lengths).
Logic control of the digital output is also a limiting factor.
If an X122 DO is controlled from the user program, no more than one edge is possible for servo cycle clock or CU sampling time of the inputs/outputs (cu.p0799[0]).
With a servo cycle clock of at least 500 µs, a max. switching frequency of 1 kHz is achieved.
The max. achievable switching frequency can also be limited by CU parameter p0799[0] (sampling time of the CU inputs/outputs) or p2048 (PROFIdrive PZD sampling time).

Certificates, approvals, declarations of conformity

You can find an overview of the certifications available for the SIMOTION CX32-2 in Appendix A (Page 155).

You can also find further information on the Internet at:

https://support.industry.siemens.com/cs/ww/en/ps/14513/cert

7.5.8 CX32-2 dimension drawings

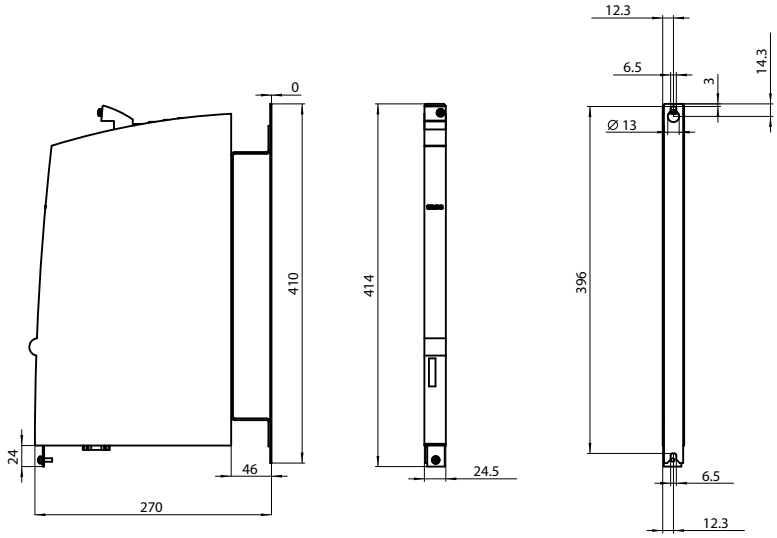

Figure 7-12 CX32-2 dimension drawings (dimensions in mm)

NOTICE
Higher operating temperature if ventilation clearances are too small The cooling clearances of 80 mm above and below the component must be observed.

7.6 Terminal module TM31

Characteristics of the TM31

With the TM31 Terminal Module, the number of available digital inputs/digital outputs and the number of analog input/analog outputs within a drive system can be expanded. The TM31 is connected via DRIVE-CLiQ. It has 2 DRIVE-CLiQ interfaces for this.

The TM31 contains the following terminals:

Table 7-36 Interface overview

Interface	Quantity
Digital inputs	8
Bidirectional inputs/outputs	4
Relay outputs with changeover contact	2
Analog inputs	2
Analog outputs	2
Temperature sensor input (KTY84-130 or PTC)	1

NOTICE
Overheating if ventilation clearances are too small Insufficient ventilation clearances result in overheating and therefore in more failures and a shortened life of the component. Maintain 50 mm ventilation clearances above and below the component.

Additional references

You will find detailed information about the TM31 in the

- *SINAMICS S120 Control Units and Additional System Components* Manual
- *SIMOTION D4x5-2* Commissioning and Hardware Installation Manual.

7.7 Terminal module TM41

Characteristics of the TM41

With the TM41 Terminal Module, the number of available digital inputs/digital outputs and the number of analog inputs within a drive system can be expanded. In addition, the TTL output can be used for encoder emulation. The TM41 is connected via DRIVE-CLiQ.

The TM41 contains the following terminals:

Table 7-37 Interface overview

Type	Quantity
Digital inputs	4
Digital inputs/outputs	4
Analog inputs	1
TTL encoder output	1

NOTICE

Overheating if ventilation clearances are too small

Insufficient ventilation clearances result in overheating and therefore in more failures and a shortened life of the component.

Maintain 50 mm ventilation clearances above and below the component.

Additional references

You will find detailed information about the TM41 Terminal Module in the

- *SINAMICS S120 Control Units and Additional System Components* Manual
- *SIMOTION D4x5-2* Commissioning and Hardware Installation Manual.

7.8 Terminal Module TM54F

Characteristics of the TM54F

The TM54F Terminal Module is a terminal expansion module for snapping on to a DIN EN 60715 mounting rail. The TM54F offers safe digital inputs and outputs for control of Safety Integrated functions of SINAMICS.

No more than one TM54F can be assigned to each drive control (SINAMICS Integrated of a D4x5-2, CX32-2, CU320-2, etc.). Connection is via DRIVE-CLiQ. Each drive control must have its own dedicated TM54F.

TM54 is equipped with the following terminals:

Table 7-38 Interface overview

Type	Quantity
Fail-safe digital outputs (F-DO)	4
Fail-safe digital inputs (F-DI)	10
Sensor [1] power supplies, dynamic response supported [2]	2
Sensor [1] power supplies, no dynamic response	1
Digital inputs for testing the F-DO during test stop	4

[1] Sensors: Fail-safe devices for commanding and detecting, such as emergency stop pushbuttons and safety locks as well as position switches and light arrays / light curtains.

[2] Dynamic response: The sensor power supply is switched on and off during test stop for testing the sensors, the cable routing, and the evaluation electronics of TM54F.

The TM54F has 4 fail-safe digital outputs and 10 fail-safe digital inputs. A fail-safe digital output consists of a P/M-switching output as well as a digital input for reading back the switching state. A fail-safe digital input is made up of two digital inputs.

NOTICE
Overheating if ventilation clearances are too small Insufficient ventilation clearances result in overheating and therefore in more failures and a shortened life of the component. Maintain 50 mm ventilation clearances above and below the component.

Additional references

You will find detailed information on the TM54F Terminal Module in the following sources:

- *SINAMICS S120 Control Units and Additional System Components* Manual
- *SINAMICS S120 Safety Integrated* Function Manual

7.9 TM15 and TM17 High Feature terminal modules

Features of TM15 and TM17 High Feature

The TM15 and TM17 High Feature Terminal Modules are used to implement inputs of measuring inputs and outputs of output cams for SIMOTION D. In addition, these Terminal Modules provide drive-related digital I/Os with short signal delay times. TM15 and TM17 High Feature are connected via DRIVE-CLiQ.

TM15

Each of the 24 electrically isolated digital I/Os can be parameterized channel-by-channel as a digital input (DI), digital output (DO), a measuring input input, or an output cam output.

TM15 DI/DO

Each of the 24 isolated digital I/Os can be configured on a channel-specific basis as a digital input (DI) or digital output (DO). The digital I/Os can be interconnected using BICO technology and thus used from the drive side as well. Unlike the TM15, measuring input inputs and cam outputs are not available with the TM15 DI/DO.

Note: The module hardware for TM15 and TM15 DI/DO is identical. A distinction is only made by the addition of the component in the SIMOTION SCOUT Project Navigator using "Inserting input/output component."

TM17 High Feature (only available as spare part)

Each of the 16 digital I/Os can be parameterized channel-by-channel as a digital input (DI), digital output (DO), measuring input input, or an output cam output.

TM17 High Feature has fewer I/O channels than TM15, but more functionality. TM17 High Feature is distinguished by especially high resolution and accuracy as well as a parameterizable input filter and enabling inputs (max. 6 units). Parameterized enable inputs can enable measuring inputs or outputs of output cams (gate function). Due to their high accuracy, the digital I/O channels of the TM17 High Feature are non-isolated.

Note

NOTICE
Overheating if ventilation clearances are too small Insufficient ventilation clearances result in overheating and therefore in more failures and a shortened life of the component. Maintain 50 mm ventilation clearances above and below the component.

Additional references

You will find further information on TM15 and TM17 High Feature in the

- *TM15 / TM17 High Feature Terminal Modules* Manual
- *Terminal Modules TM15 and TM17 High Feature* Commissioning Manual

7.10 CUA31/CUA32 control unit adapter

Properties of the CUA31/CUA32

You can connect Power Modules in blocksize format via DRIVE-CLiQ to the D4x5-2 Control Units using the CUA31/CUA32 adapter modules.
The CUA32 adapter module also has an additional encoder interface for an HTL, TTL, or SSI encoder.

The following Power Modules are supported:

- PM340
- PM240-2 (as of SIMOTION V4.4 / SINAMICS V4.7)

The mixed operation of a PM240-2 with booksize modules and/or PM340 blocksize modules on a CU320-2/D4x5-2/CX32-2 is possible as of SINAMICS V4.7 HF12 or SIMOTION V4.4 HF6 (SINAMICS Integrated V4.7 HF12).

Table 7-39 Number of interfaces on the adapter modules

Interface	CUA31[1)]	CUA32
DRIVE-CLiQ interface	3	3
EP terminal / temperature sensor connection	1	1
Power Module Interface (PM-IF)	1	1
24 V electronic power supply	1	1
Encoder interface (HTL, TTL, SSI) Only SSI encoders without incremental tracks may be operated.	0	1
DRIVE-CLiQ cable length, max.	100 m	100 m

[1)] CUA31 with article number 6SL3040-0PA00-0AAx (x ≥ 1 required)

NOTICE
Overheating if ventilation clearances are too small Insufficient ventilation clearances result in overheating and therefore in more failures and a shortened life of the component. Maintain 50 mm ventilation clearances above and below the component. The ventilation openings must not be covered by cables.

Additional references

You will find more information on the CUA31/CUA32 Control Unit Adapter in the *SINAMICS S120 AC Drive* Manual.

7.11 DMC20 DRIVE-CLiQ hub

Properties

The DMC20 and DME20 DRIVE-CLiQ hub modules are used to implement point-to-point distribution of a DRIVE-CLiQ line. With the DMC20/DME20, an axis grouping can be expanded with four DRIVE-CLiQ sockets for additional subgroups.

- DMC20 is the hub for the control cabinet configuration
- DME20 is the hub for use without a control cabinet (IP67 degree of protection).

The modules are especially suitable for applications which require DRIVE-CLiQ nodes to be removed in groups, without interrupting the DRIVE-CLiQ line and therefore the data exchange.

Additional references

You will find detailed information about the DMC20/DME20 in the following source:

SINAMICS S120 Control Units and Supplementary System Components Manual

Spare parts/accessories

8

8.1 Available spare parts and accessories

Table 8-1 Spare parts and accessories

Parts for the SIMOTION D4x5-2	Article number	Accessories	Spare part
CompactFlash card (CF card) 2 GB CompactFlash card (CF card) with drive software and SIMOTION Kernel (latest CF card at the time of writing)	6AU1400-2QA20-0AA0	x	
SD card 8 GB SD card with drive software and SIMOTION Kernel	6AU1400-3SA20-0AA0	x	
Seal for external heat dissipation (only for D445-2 DP/PN and D455-2 DP/PN)	6FC5348-0AA07-0AA0	x	
Double fan/battery module incl. battery The double fan/battery module is included in the scope of delivery for the SIMOTION D4x5-2 (-0AA0/-0AA1).	6FC5348-0AA02-0AA0		x
3 V lithium battery for fan/battery module	6FC5247-0AA18-0AA0		x
Terminal kit, contains • 3 x I/O connectors for X122/X132/X142 • 1 x 24 V connector for X124 • 5 x DRIVE-CLiQ blanking covers for X100-X105	6SL3064-2CB00-0AA0		x
Option slot protective cover	6SL3064-3CB00-0AA0		x
Spacer • For SIMOTION D425-2/D435-2 and D4x5-2 (-0AA2) • For SIMOTION D445-2/D455-2	 6SL3064-1BB00-0AA0 6FC5348-0AA06-0AA0		 x x
Dust protection blanking plugs for sealing unused DRIVE-CLiQ, Ethernet, or PROFINET ports • Filler plugs (50 pcs)	6SL3066-4CA00-0AA0	x	x
Blanking cover for the protection of the operator controls	6SL3064-3BB00-0AA0		x

Accessories for PROFIBUS	Article number	Accessories	Spare part
PROFIBUS RS485 bus connector with angular cable outlet (35°) with screw-type terminals, max. transmission rate 12 Mbit/s			
• Without PG/PC interface	6ES7972-0BA42-0XA0	x	
• With PG/PC interface	6ES7972-0BB42-0XA0	x	
PROFIBUS FastConnect bus RS485 connector with angular cable outlet (35°) with insulation displacement terminals, max. transmission rate 12 Mbit/s			
• Without PG/PC interface	6ES7972-0BA61-0XA0	x	
• With PG/PC interface	6ES7972-0BB61-0XA0	x	
PROFIBUS adapter connector for raising the PROFIBUS connector to create more wiring space	6FX2003-0BB00	x	

Accessories for PROFINET (interface X150)	Article number	Accessories	Spare part
RJ45 FastConnect connector for Industrial Ethernet / PROFINET			
• 145° cable outlet (10/100 Mbps)			
- 1 pack = 1 unit	6GK1901-1BB30-0AA0	x	
- 1 pack = 10 units	6GK1901-1BB30-0AB0	x	
- 1 pack = 50 units	6GK1901-1BB30-0AE0	x	
FastConnect cables for Industrial Ethernet / PROFINET [1]			
• IE FC standard cable GP 2x2	6XV1840-2AH10	x	
• IE FC flexible cable GP 2x2	6XV1870-2B	x	
• IE FC trailing cable GP 2x2	6XV1870-2D	x	
• IE FC trailing cable 2x2	6XV1840-3AH10	x	
• IE FC marine cable 2x2	6XV1840-4AH10	x	
Stripping tool for Industrial Ethernet / PROFINET FastConnect cables			
• IE FC Stripping Tool	6GK1901-1GA00	x	

[1] Sold by the meter; max. length 1000 m; minimum order 20 m.

Accessory for Industrial Ethernet (interface X120, X127, X130)	Article number	Accessories	Spare part
RJ45 FastConnect connector for Industrial Ethernet / PROFINET			
• 180° cable outlet (10/100/1000 Mbit/s)			
- 1 pack = 1 unit	6GK1901-1BB11-2AA0	x	
- 1 pack = 10 units	6GK1901-1BB11-2AB0	x	
- 1 pack = 50 units	6GK1901-1BB11-2AE0	x	
FastConnect cables for Industrial Ethernet / PROFINET [1]			
• IE FC Standard Cable GP 4x2	6XV1878-2A	x	

Accessory for Industrial Ethernet (interface X120, X127, X130)	Article number	Accessories	Spare part
• IE FC flexible cable GP 4x2	6XV1878-2B	x	
Stripping tool for Industrial Ethernet / PROFINET FastConnect cables			
• IE FC Stripping Tool	6GK1901-1GA00	x	
Dust-proof filler plugs for sealing unused DRIVE-CLiQ, Ethernet, or PROFINET ports			
• Filler plugs (50 pcs)	6SL3066-4CA00-0AA0	x	

[1] Sold by the meter; max. length 1000 m; minimum order 20 m.

You can find order data information for other SINAMICS drive components, such as Line Modules, Motor Modules, DRIVE-CLiQ cables, etc. in Catalog *SIMOTION PM 21*.

Connectors and cables

The adapter plug (Article no. 6FX2003-0BB00) is required for the D4x5-2 when the bus cable has to be looped through the left-hand PROFIBUS interface (X126; two PROFIBUS cables wired to the plug) and also

- Ethernet interface X120, in the case of D4x5-2 DP or
- Port 3 of the PROFINET interface X150 in the case of D4x5-2 DP/PN

has to be wired to a FastConnect plug. When using the adapter plug, the PROFIBUS connector is higher, which creates extra wiring space.

Ethernet interfaces X120, X127 and X130 support 10, 100 and 1000 Mbps. For 1000 Mbps, 8-core cables (4x2) must be used as well as the 1000 Mbit version of the 180° FastConnect plug.

The 145° FastConnect plugs cannot be used for Ethernet interface X130 (cable outlet downward). They also only support a maximum of 100 Mbit/s.

Spares On Web

Spares On Web is an information system that displays which spare parts are available for your device.

Spares On Web (https://www.sow.siemens.com)

In order to view the spare parts, you require the article number and the serial number of the module. Both numbers can be found on the type plate on the module or the packaging label.

Repair parts

Repair parts (e.g. front flaps, shield connection terminals) have only one material number (A5E... or GWE-...).

In Spares On Web, repair parts are only visible to repair centers.

In the case of SIMOTION D, selected repair parts can also be ordered by customers.

For additional information, see FAQ (https://support.industry.siemens.com/cs/ww/en/view/29727640).

Standards and approvals

A

A.1 General rules

CE marking

CE	Our products satisfy the requirements and protection objectives of the EC Directives and comply with the harmonized European standards (EN).

UKCA marking

UK CA	SIMOTION complies with the designated British Standards (BS) published in the official consolidated list of the British government. SIMOTION meets the requirements and protection goals of the following regulations and associated amendments: • Electrical Equipment (Safety) Regulations 2016 (Low Voltage) • Electromagnetic compatibility regulations 2016 (EMC) • Directive on the restriction of the use of certain hazardous substances in electrical and electronic equipment 2012 (RoHS Directive) • Regulations for the supply of machines (safety) 2008

The UK Declaration of Conformity is also available for download on the Siemens Industry Online Support website at the following link (https://support.industry.siemens.com/cs/ww/en/view/109798570):

UK importer: Siemens plc
UK importer address:
Manchester
M20 2UR
United Kingdom

Electromagnetic compatibility

Standards for EMC are satisfied if the EMC Installation Guideline is observed.

SIMOTION products are designed for industrial use in accordance with product standard DIN EN 61800-3, Category C2.

cULus approval

C UL US	Listed component mark for United States and the Canada Underwriters Laboratories (UL) according to Standard UL 508, File E164110, File E115352, File E85972.

You can find further information on the respective device on the Internet at http://database.ul.com/cgi-bin/XYV/template/LISEXT/1FRAME/index.htm Enter the first seven characters of the article number at **Keyword**. Then click **Search**.

EMC limits in South Korea

	KC registration number: KCC-REM-S49-SIMOTION For sellers or other users, please keep in mind that this device in an A-grade electromagnetic wave device. This device is intended to be used in areas other than home. 이 기기는 업무용(A급) 전자파적합기기로서 판매자 또는 사용자는 이 점을 주의하시기 바라며, 가정외의 지역에서 사용하는 것을 목적으로 합니다.

The EMC limits to be observed for Korea correspond to the limits of the EMC product standard for variable-speed electric drives EN 61800-3 of category C2 or the limit class A, Group 1 according to EN 55011. By implementing appropriate additional measures, the limit values according to category C2 or limit value class A, Group 1, are observed. Additional measures, such as the use of an additional RFI suppression filter (EMC filter), may be necessary.

The measures for EMC-compliant design of the system are described in detail in this manual respectively in the Installation Guideline EMC.

Note that the final statement on compliance with the standard is provided by the respective label attached to the individual unit.

Declaration of conformity

The current Declaration of conformity is available on the Internet at Declaration of conformity (https://support.industry.siemens.com/cs/ww/en/ps/14506/cert)).

Marking for Australia and New Zealand

	SIMOTION D4x5-2 incl. CX32-2 and CBE30-2 satisfy the requirement of the standard AS/NZS CISPR 16.
or	
	Marking with RCM (Regulatory Compliance Mark) or C-Tick with older components.

Marking for the Eurasian customs union

EAC	EAC (Eurasian Conformity) Customs union of Russia, Belarus and Kazakhstan Declaration of conformity in accordance with the technical regulations of the customs union (TR CU).

Standards that are not relevant

CCC	China Compulsory Certification SIMOTION D does not belong to the validity area of the China Compulsory Certification (CCC).

China RoHS

SIMOTION D complies with the China RoHS directive. You can find more information on the Internet (https://support.industry.siemens.com/cs/ww/en/view/109738656).

A.2 SIMOTION D4x5-2 device-specific notes

Note regarding SIMOTION D

Note

The product standard EN 61800-3 describes the EMC requirements placed on "Variable-speed drive systems". As such, it defines different limits depending on the location of the drive system.

SINAMICS S120 power units are designed for use in the second environment. The term second environment refers to all locations outside residential areas. These are basically industrial areas which are supplied from the medium-voltage line supply via their own transformers.

The same installation instructions apply for the SIMOTION D4x5-2/CX32-2 Control Units as for the SINAMICS S120 CU320-2 Control Units with regard to EMC.

It is essential to follow the installation instructions in the SINAMICS S120 Manuals in order to ensure compliance with emitted interference and immunity values.

For further information on this topic also refer to the *SIMOTION PM 21* Catalog as well as the SINAMICS Function Manuals.

Rules for routing cables

In order to maximize noise immunity for the complete system (control, power unit, machine) the following EMC measures must be observed:

- A minimum distance of 200 mm is to be observed between the signal lines and power cables.
- If necessary, signal and load cables may cross one another (if possible, at an angle of 90°), but must never be laid close or parallel to one another.
- Only use cables approved by Siemens for the signal lines from and to the NCU.
- Signal cables may not be routed close to strong external magnetic fields (such as motors and transformers).
- If signal lines cannot be routed a sufficient distance away from other cables, they must be installed in grounded cable ducts (metal).

ESD guidelines

B

B.1 ESD definition

What does ESD mean?

Electrostatic sensitive devices (ESDs) are individual components, integrated circuits, modules or devices that may be damaged by either electrostatic fields or electrostatic discharge.

NOTICE

Damage caused by electric fields or electrostatic discharge

Electric fields or electrostatic discharge can result in malfunctions as a result of damaged individual parts, integrated circuits, modules or devices.

- Only pack, store, transport and send electronic components, modules or devices in their original packaging or in other suitable materials, e.g conductive foam rubber or aluminum foil.
- Only touch components, modules and devices if you are first grounded by applying one of the following measures:
  - Wearing an ESD wrist strap
  - Wearing ESD shoes or ESD grounding straps in ESD areas with conductive flooring
- Only place electronic components, modules or devices on conductive surfaces (table with ESD surface, conductive ESD foam, ESD packaging, ESD transport container).

B.2 Electrostatic charging of individuals

Any person who is not conductively connected to the electrical potential of the environment can accumulate an electrostatic charge.

This figure indicates the maximum electrostatic charges that can accumulate on an operator when he comes into contact with the indicated materials. These values comply with the specifications in IEC 801-2.

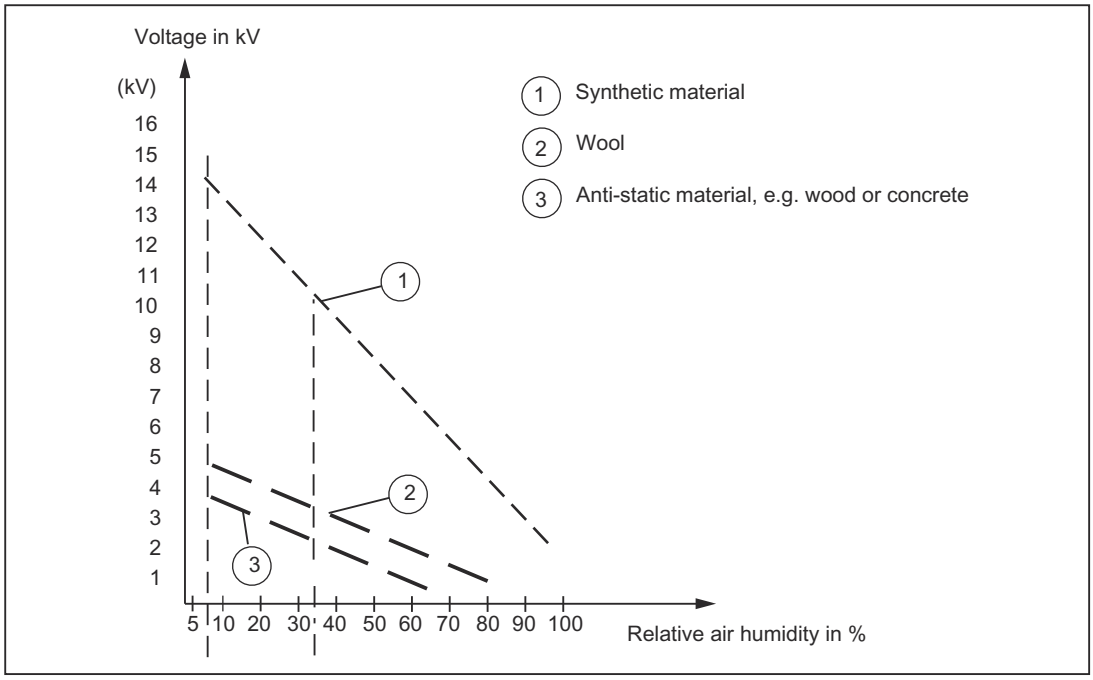

Figure B-1 Electrostatic voltage that can accumulate on operating personnel

B.3 Basic measures for protection against discharge of static electricity

Ensure sufficient grounding

When working with electrostatic sensitive devices, make sure that the you, your workstation, and the packaging are properly grounded. This prevents the accumulation of static electricity.

Avoid direct contact

You should only touch ESD components if unavoidable (for example, during maintenance work). When you touch modules, make sure that you do not touch either the pins on the modules or the printed conductors. If you follow these instructions, electrostatic discharge cannot reach or damage sensitive components.

If you have to take measurements on a module, make sure that you first discharge any static that may have accumulated in your body. To do this, touch a grounded metal object. Only use grounded measuring instruments.

Index

A

Accessories
- Additional parts, 151
- CBE30-2, 123
- CUA31, 149
- CUA32, 149
- CX32-2, 130
- DMC20/DME20 DRIVE-CLiQ hub, 150
- TB30, 115
- TM15, 147
- TM17 High Feature, 147
- TM31, 145
- TM41, 146
- TM54F, 146

Ambient conditions
- Climatic, 93
- Mechanical, 93

Analog inputs/outputs
- TB30, 120

Axis grouping, 26
- DRIVE-CLiQ components, 26
- SIMOTION D, 26
- SINAMICS infeed, 26
- SINAMICS power unit, 26

B

Backup
- Data, 113
- Non-volatile data, 103
- Real-time clock, 104

C

CAD data, 109

CBE30-2
- Interfaces, 125
- Properties, 123

CBE30-2 Ethernet communication board, 125

CBE30-2 interfaces, 125

CE marking, 155

CF card
- Characteristics, 45
- Usage, 45

CF card
- Licenses, 47
- Slot, 87
- Type plate, 47

Circuit-diagram macro, 109

CUA31/CUA32 interfaces, 149

cULus approval, 155

CX32-2
- Interfaces, 132

CX32-2
- Scalability, 130

CX32-2 digital inputs/outputs
- Circuit diagram, 135
- Use, 136

CX32-2 interfaces
- Digital inputs/outputs X122, 134
- DRIVE-CLiQ X100 - X103, 134
- Measuring sockets, 139
- Overview, 132
- Power supply, 138

CX32-2 measuring sockets, 139

CX32-2 power supply interface
- Assignment, 138

D

D4x5-2 digital I/Os
- Use, 76

D4x5-2 digital inputs/outputs
- Circuit diagram, 72

D4x5-2 interfaces
- CompactFlash card slot, 87
- Digital inputs/outputs, 71
- DRIVE-CLiQ, 66
- Ethernet, 79
- Measuring sockets, 88
- Overview, 65
- Power supply, 77
- PROFIBUS, 84
- PROFINET IO (D4x5-2 DP/PN only), 68
- SD card slot, 87
- USB interfaces, 89

Declaration of conformity, 156

Device representation
- D425-2 DP and D435-2 DP, 34
- D425-2 DP/PN and D435-2 DP/PN, 36
- D445-2 DP/PN and D455-2 DP/PN, 39

DIAG button, 62

Diagnostic buffer, 140

Dimension drawing, 109
D425-2 DP/PN, D435-2 DP/PN, 107
D445-2 DP/PN, D455-2 DP/PN, 108
Distributed I/O systems, 28
DMC20
Properties, 150
DMC20 (hub)
Properties, 150
DME20
Properties, 150
DME20 hub
Properties, 150
DRIVE-CLiQ
Advantages, 31
Components, 31
Interface on CX32-2, 134
Interfaces, 66

E

Electromagnetic compatibility, 155
EMC directives, 155
ESD guideline, 159
Ethernet
Interfaces, 79

F

Fan/battery module
Installation, 114

G

Guideline
ESD, 159

I

I/O systems
PROFIBUS, 28
PROFINET, 30
PROFINET via CBE30-2, 123
Released, 32

L

LED display
CBE30-2, 127
CX32-2, 139
D4x5-2, 63
Licenses
CF card, 47
SD card, 52

M

MAC addresses, 43, 125
Measuring input input
Accuracy for CX32-2, 143
Mode switch, 59
Positions, 58
Module
Storage conditions, 91
Transportation conditions, 91

N

Non-volatile data
Backup, 103

O

Operator controls
DIAG button, 62
Mode switch, 58
Service switch, 58

P

PLC and motion control
D4x5-2 performance, 99
Power supply interface
Assignment, 77
PROFIBUS DP interface
Assignment, 85
PROFINET
With CBE30-2, 123
PROFINET IO
Interfaces, 68
PROFINET IO
Second interface, 71

R

Rating plate, 41
D4x5-2, 41
Real-time clock, 104
References, 3
RESET button, 63
Runtime licenses, 47, 52

S

Safety information, 125
    Terminal board 30 (TB30), 116
SD card
    Slot, 87
SD card
    Handling, 50
    Licenses, 52
    Properties, 50
    Type plate, 52
Service selector switch
    Positions, 61
SIMOTION D
    System overview, 23
SIMOTION D4x5-2
    Hardware components, 26
    Possible applications, 24
    Software components, 27
    Versions, 25
Spare parts, 151
    Article numbers, 151
    Connectors and cables, 151
Storage conditions, 91
Switch settings, 58
System components, 27

T

TB30
    Technical data, 121
TB30 Interfaces
    Analog I/Os X482, 120
    Digital I/Os X481, 119
    Overview, 116
    X424 interface, 118
TB30 terminal board
    Overview, 115
TB30 Terminal Board
    External power supply for DI/DO, 118
Technical data
    CBE30-2, 129
    CX32-2, 140
    Digital inputs, digital outputs, 100
    for operation, 93
    Interfaces, 99
    Memory capacities, 98
    Power supply, 96
    Real-time clock, 104
    Standards, 93
    TB30, 121
Terminal Module
    TM15 and TM17 High Feature, 147
    TM31, 145
    TM41, 146
    TM54F, 146
TM15 and TM17 interfaces, 147
TM31 interfaces, 145
TM41 Interfaces, 146
TM54F Interfaces, 146
Transportation conditions, 91
Type plate
    CBE30-2, 124
    CF card, 47
    SD card, 52

U

UL certification, 155
USB interfaces, 89